MODULAR LINEAR ACTUATORS

3rd Edition

www.nookindustries.com

NOOK™

NOOK HISTORY

In 1969, Joseph H. Nook, Jr. founded Nook Industries, Inc. intending to become a global supplier of Linear Motion components. Ball screws, both rolled and ground, were the cornerstone product in the early 1970's.

Today, Nook Industries offers one of the most complete Linear Motion product lines in the world.

The Precision Screw Group offers an exhaustive line of acme screws, ball screws, roller screws, ball splines, linear bearings, end supports and custom end machining.

The Precision Actuator Group offers modular linear actuators, machine screw jacks, profile rail systems, electric cylinders, linear shafting and control systems.

NOOK QUALITY

Pairing traditional and proven design with the latest technology, Nook Industries manufactures products that our customers value. The expansion of product lines and the development of application specific components and engineered systems have propelled Nook Industries to the forefront of the industry.

Nook Industries is committed to customer satisfaction and providing high-quality, high-value products that are delivered on time at a competitive price.

ISO 9001:2000 REGISTERED COMPANY

AS 9001:2000 QUALIFIED COMPANY

Nook precision screw and actuator products are used in virtually every market segment, including:

- aerospace
- automotive
- chemical
- electronics
- entertainment
- factory automation
- medical & diagnostic
- military & defense
- packaging
- pulp & paper
- semiconductor
- solar energy
- steel
- support stands
- tire manufacturing
- transportation

PTDA Member

bsa Certified Bearing Specialist

ASSOCIATION FOR HIGH TECHNOLOGY DISTRIBUTION AHTD

NOOK™

Precision Actuatorgroup
a division of Nook Industries

2D/3D CAD files online

FASTER DEVELOPMENT

The first fully configurable and downloadable native CAD formats for 2D drawings and 3D models online for ball screws, acme screws, screw jacks, electric cylinders, linear components and slide systems. Configure, view and download assemblies directly to your CAD program to determine how it fits into your overall designs.

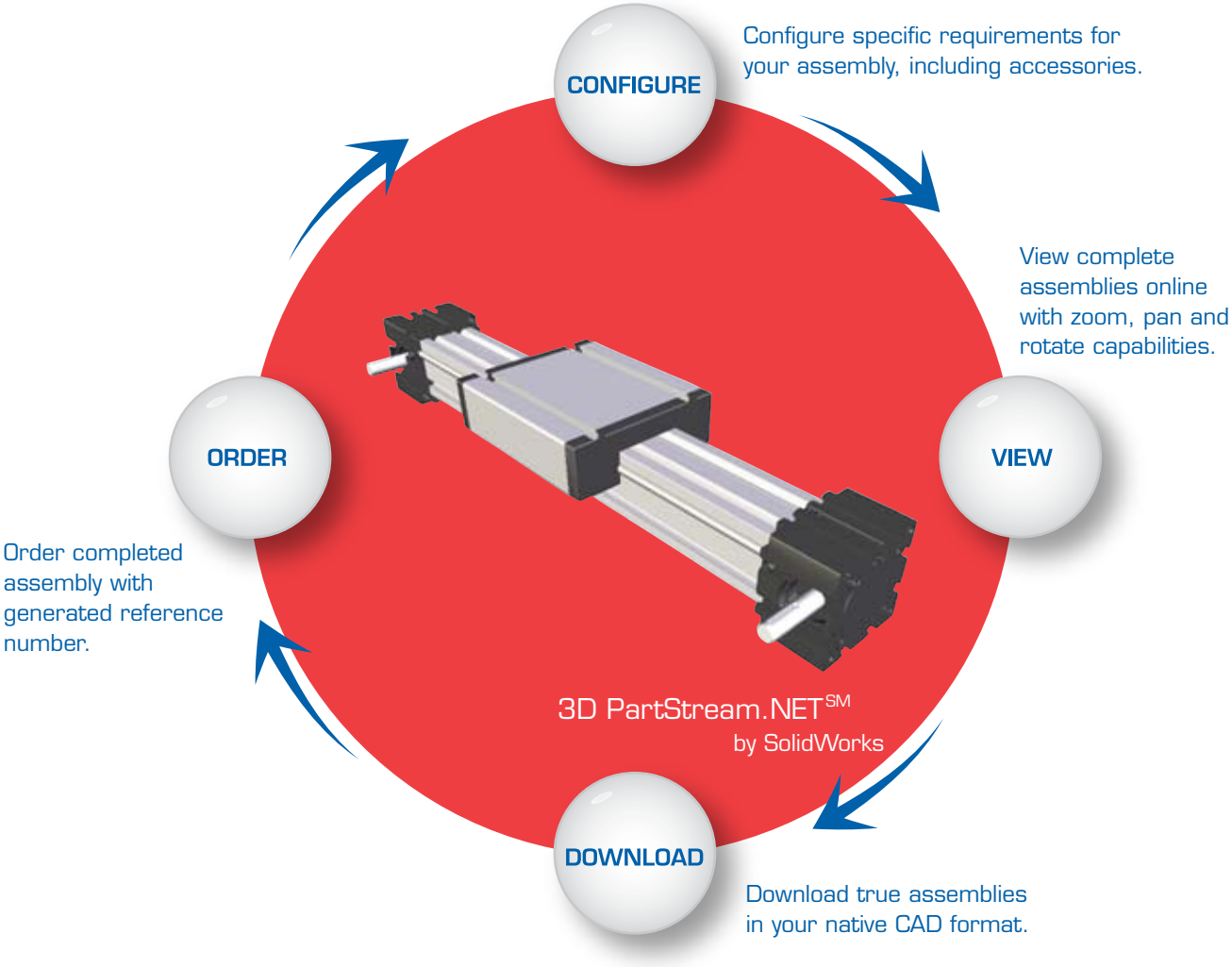

www.nookindustries.com

4950 East 49th Street • Cleveland • Ohio • 44125-1016 • USA

Product Line Overview

Modular Linear Actuator
EGT/EGK 30, 40, 60, 80
Mechanical system with plastic prismatic guides.
System is driven by an integrated Acme thread or ballscrew.

Repeating accuracy:
Acme thread: ± 0,2 mm
Ballscrew: ± 0,025 mm
Velocity:
Acme thread: max. 0,5 m/sec
Ballscrew: max. 1 m/sec

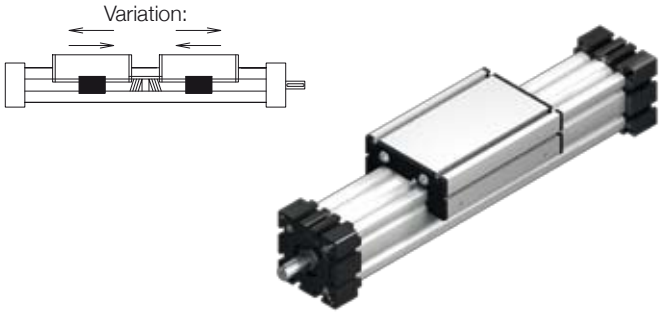

Modular Linear Actuator
EGTH/EGKH 40, 60, 80
Mechanical telescopic system with plastic prismatic guides. System is driven by an integrated Acme thread or ballscrew. Result is a telescopic movement.

Repeating accuracy:
Acme thread: ± 0,2 mm
Ballscrew: ± 0,025 mm
Velocity:
Acme thread: max. 0,5 m/sec
Ballscrew: max. 1 m/sec

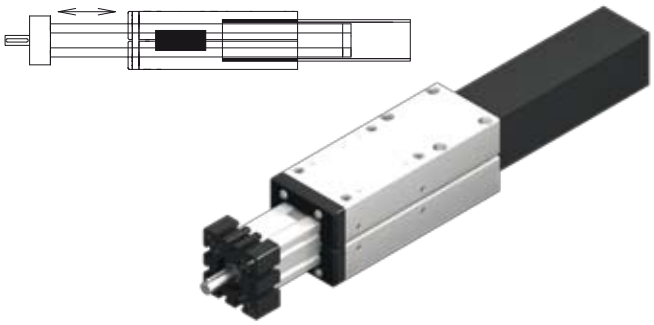

Modular Linear Actuator
EHT/EHK 40, 60, 80, 100, 125
Mechanical telescopic system with plastic prismatic guides. System is driven by an integrated Acme thread or ballscrew. Result is a telescopic movement.

Repeating accuracy:
Acme thread: ± 0,2 mm
Ballscrew: ± 0,025 mm
Velocity:
Acme thread: max. 0,5 m/sec
Ballscrew: max. 1 m/sec

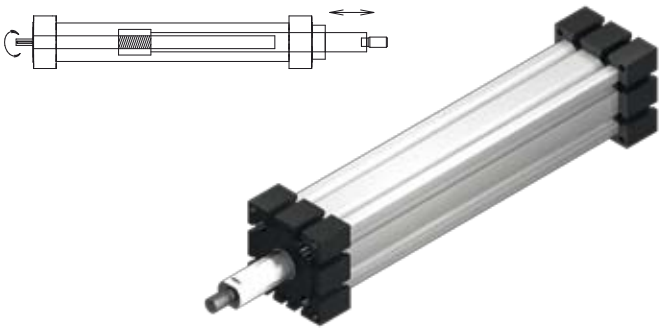

Modular Linear Actuator
ELT/ELK 30, 40, 60, 60S, 80, 80S,100, 125
Mechanical system with roll guides outside of profile.
System is driven by an integrated Acme thread or ballscrew.

Repeating accuracy:
Acme thread: ± 0,2 mm
Ballscrew: ± 0,025 mm
Velocity:
Acme thread: max. 0,5 m/sec
Ballscrew: max. 1 m/sec

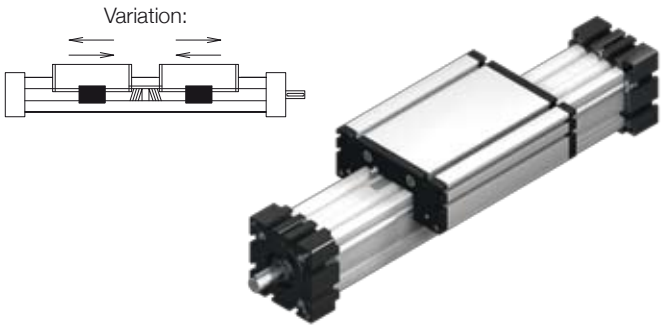

Non Driven Modular Linear Actuators
ELR 30, 40, 60, 60S, 80, 80S, 100, 125
ELRZ 30, 40, 60, 60S, 80, 80S, 100, 125
ER 30, 40, 60, 60S, 80, 80S, 100, 125
Mechanical system with roll guides outside of profile.

E 40, 60, 60S, 80, 80S
Mechanical system with roll guides outside of profile.

UL 40, 60, 80
Mechanical system with roll guides inside of profile.

Velocity:
max. 10 m/sec

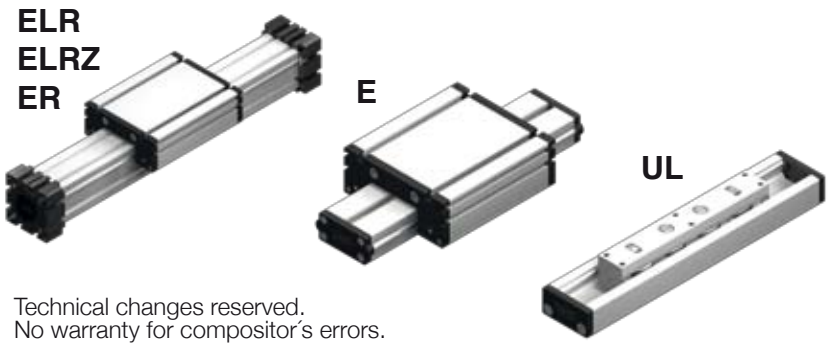

Technical changes reserved.
No warranty for compositor´s errors.

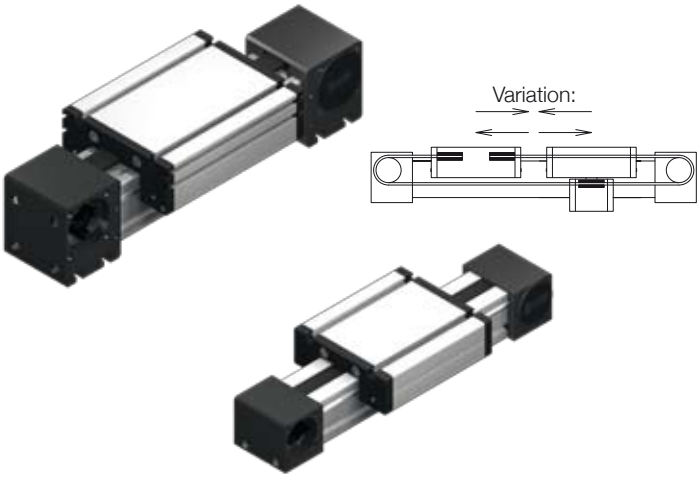

Modular Linear Actuator
ELZ/ELZex 30, 40, 60, 60S, 80, 80S, 100, 125
Mechanical system with roll guides outside of profile. System is belt driven. ELZex like ELZ. The Modular Linear Actuator is suitable for use according to the intended purpose in potentially explosive areas (see ATEX 95 marking).

Modular Linear Actuator
MLZ 60, 60S, 80, 80S, 100
Mechanical system with roll guides outside of profile.
The system is driven by a belt that is guided inside the profile.

Repeating accuracy:
± 0,1 mm
Velocity:
max. 10 m/sec (ELZex: max. 1m/sec, MLZ: max. 8 m/sec)

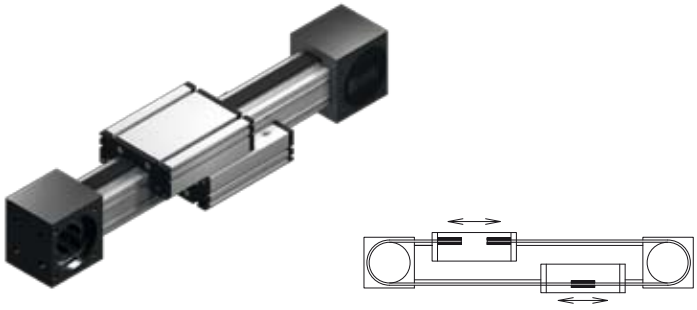

Modular Linear Actuator
ELZG 30, 40, 60, 60S, 80, 80S
Mechanical system with 2 roll guides outside of profile. System is driven by one rotating timing belt. At each end of this belt a carriage is fixed. Result is two carriages moving in opposite direction over the complete length of the leading the profile.

Repeating accuracy:
± 0,1 mm
Velocity:
max. 10 m/sec

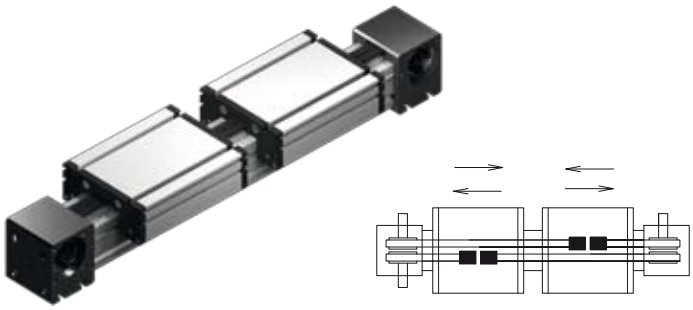

Modular Linear Actuator
ELZZ 60, 60S, 80, 80S, 100, 125
Same function as ELZ, but each carrier with separate drive. Divided pulleys have separate bearings, so two parallel moving belts are connected each with one carriage.

Repeating accuracy:
± 0,1 mm
Velocity:
max. 5 m/sec

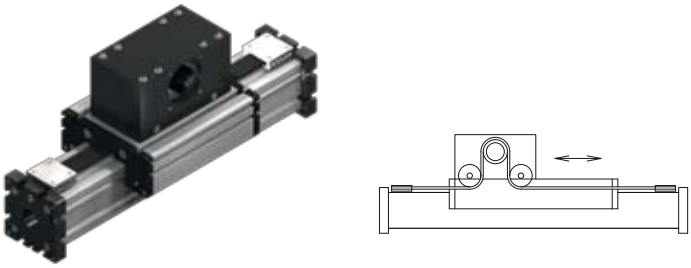

Modular Linear Actuator
ELSZ 30, 40, 60, 60S, 80, 80S, 100, 125
Same function as ELZ, but with driven carriage.

Repeating accuracy:
± 0,1 mm
Velocity:
max. 6 m/sec

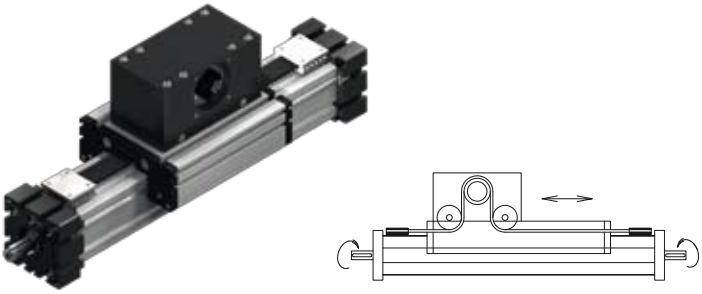

Modular Linear Actuator
ELSD 40, 60, 60S, 80, 80S, 100
Same function as ELSZ. An additional turning shaft is integrated into the leading profile. Grippers and other components can be adapted to the shaft.

Repeating accuracy:
± 0,1 mm
Velocity:
max. 6 m/sec

Product Line Overview

Modular Linear Actuator
ELZT 40, 60, 60S, 80, 80S, 100

Same function as ELZ. Two carriages are moving in different directions. Result is a telescopic movement.

Repeating accuracy:
± 0,1 mm
Velocity:
max. 6 m/sec

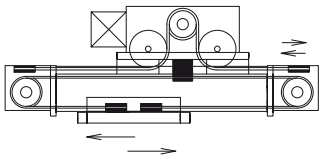

Modular Linear Actuator
ELHZ 60, 60S, 80, 80S, 100, 125

Mechanical system with roll guides outside of profile. System is driven by an internal belt. Position of shaft is horizontal to the carriage.

Repeating accuracy:
± 0,1 mm
Velocity:
max. 8 m/sec

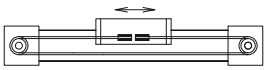

Modular Linear Actuator
ELVZ 60, 60S, 80, 80S, 100, 125

Mechanical system with roll guides outside of profile. System is driven by an internal belt. Position of shaft is vertical to carriage.

Repeating accuracy:
± 0,1 mm
Velocity:
max. 8 m/sec

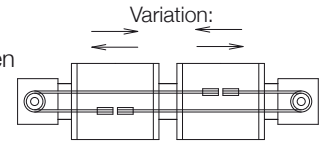

Modular Linear Actuator
ELFZ 60S, 80S, 100, 125

Special lifting system with roll guides outside of profile. System is driven by one rotating timing belt with one drive. The function corresponds to a simple pulley block.

Repeating accuracy:
± 0,1 mm
Velocity:
max. 4 m/sec

Modular Linear Actuator
ELFZex 60S, 80S, 100, 125

Special lifting system with roll guides outside of profile. System is driven by one rotating timing belt with one drive. The function corresponds to a simple pulley block. This system is additionally ATEX95 certified.

Repeating accuracy:
± 0,1 mm
Velocity:
max. 1 m/sec

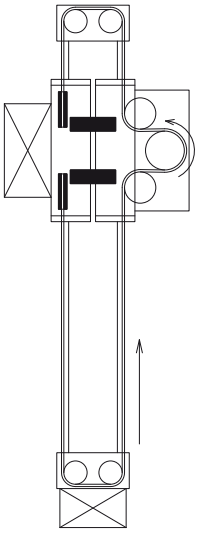

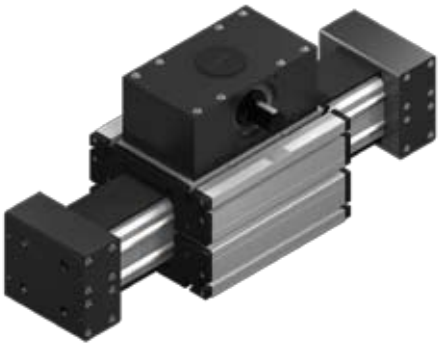

Modular Linear Actuator
ELZU 30, 40, 60, 60S, 80, 80S, 100

Surface portal, consisting of 2 Y-axes and 1 X-axis, driven by one rotating belt. This belt runs around different deflection pulleys. Positioning is achieved by two motors. The coordinate is diagonal to the deflection points of the Y-axes.
Advantage: Only small masses are moved, so that high acceleration can be realized.

Repeating accuracy: ± 0,1 mm
Velocity: max. 6 m/sec
Acceleration: max. 20 m/sec²

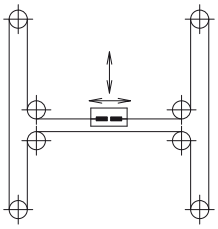

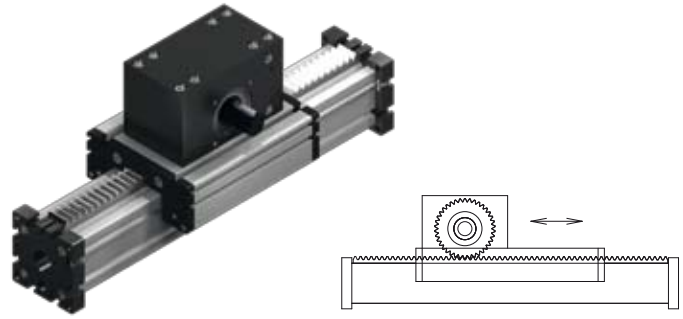

Modular Linear Actuator
ELZA 40, 60, 60S, 80, 80S, 100
Same function as ELSZ. A rack is mounted onto the leading profile. A pinion gear is fitted to the carriage.

Repeating accuracy:
± 0,2 mm
Velocity:
max. 3 m/sec

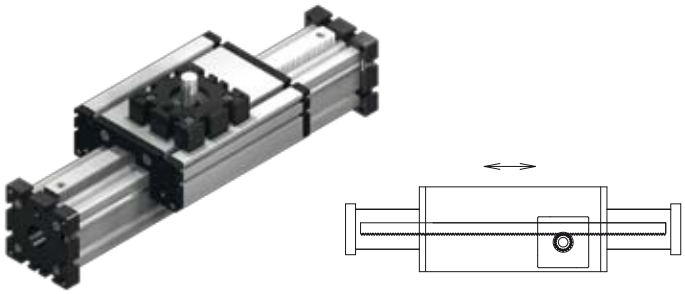

Modular Linear Actuator
ELZQ 60, 80, 80S
Special lifting unit with function as ELZA. High dynamic and accuracy is achieved by a precision rack and pinion.

Repeating accuracy:
± 0,1 mm
Velocity:
max. 3 m/sec

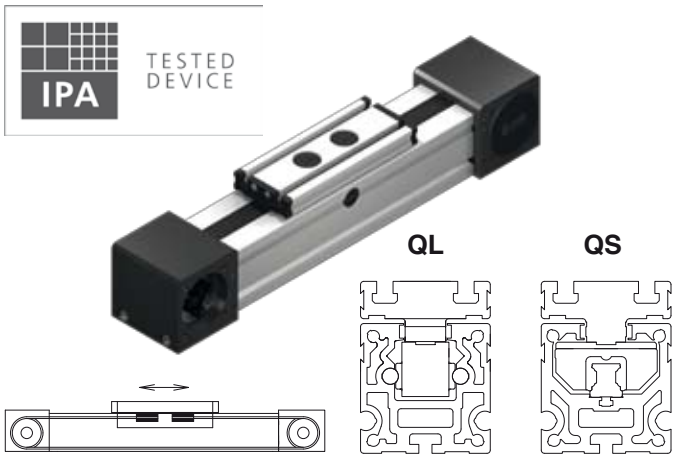

Modular Linear Actuator
QSZ 60, 80, 100
Mechanical system with an integrated ball rail inside of profile. System is driven by a timing belt which is guided within the profile. This unit is suitable for cleanroom applications (Clean room classification: VDI 2083, class 4; ISO 14644-1, class 6; US Federal Standard 209E, class 1.000

Modular Linear Actuator
QLZ 60, 80, 100
Mechanical system with roll guides inside of profile. System is driven by a belt which is guided within the profile.

Repeating accuracy:
± 0,1 mm
Velocity:
max. 6 m/sec

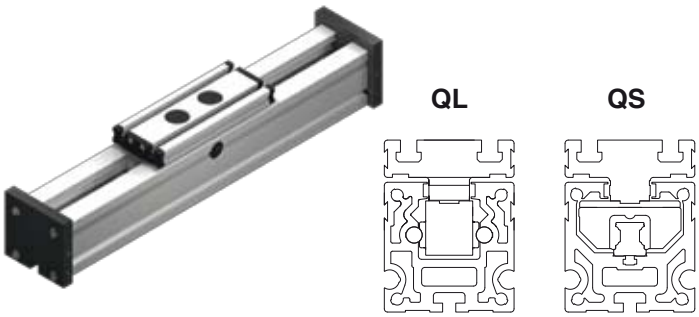

Modular Linear Actuator
QLR 60, 80, 100
Mechanical system with roll guides inside of profile.

Non-driven Modular Linear Actuator
QSR 60, 80, 100
Mechanical system with an integrated ball rail inside of profile.

Velocity:
max. 6 m/sec

Modular Linear Actuator
QSSZ 60, 80, 100
Same function as QSZ, but with driven carriage.

Repeating accuracy:
± 0,1 mm
Velocity:
max. 6 m/sec

Product Line Overview

Modular Linear Actuator
QST/QSK 60, 80, 100
Mechanical system with a double integrated ball rail inside of profile.
System is driven by an integrated Acme thread or ballscrew.

Repeating accuracy:
Acme thread: ± 0,2 mm
Ballscrew: ± 0,025 mm
Velocity:
max. 0,5 m/s
max. 1 m/s

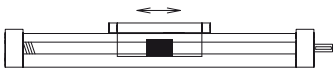

Non-driven Modular Linear Actuator
QSSR 60, 80, 100
Mechanical system with an integrated ball rail inside of profile.

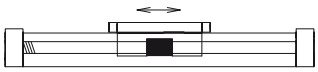

Modular Linear Actuator
DLZ 120, 160, 200
Mechanical system with roll guides inside of profile.
System is driven by an internal belt.

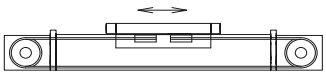

Modular Linear Actuator
DSZ 120, 160, 200
Mechanical system with a double integrated ball rail inside of profile.
System is driven by an internal belt.

Repeating accuracy:
± 0,1 mm
Velocity:
max. 6 m/sec

DL

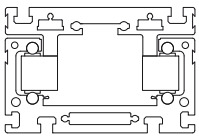

DS

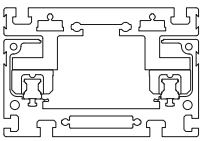

Modular Linear Actuator
DLSZ 120, 160, 200
Mechanical system with roll guides inside of profile.
Same function as DLZ but with driven carriage.

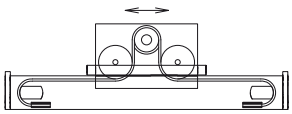

Modular Linear Actuator
DSSZ 120, 160, 200
Mechanical system with a double integrated ball rail inside of profile.
Same function as DSZ but with driven carriage.

Repeating accuracy:
± 0,1 mm
Velocity:
max. 6 m/sec

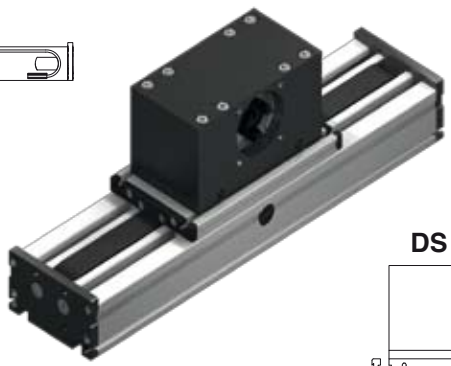

DL

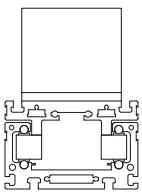

DS

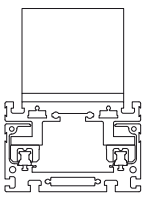

Modular Linear Actuator
DLVZ 120, 160
Mechanical system with roll guides inside of profile. System is driven by an internal belt. Position of shaft is vertical to carriage.

Repeating accuracy:
± 0,1 mm
Velocity:
max. 6 m/sec

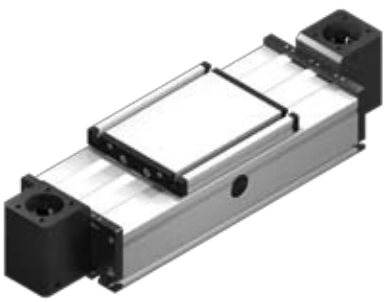

DL DS

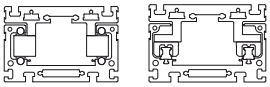

Modular Linear Actuator
DLR 120, 160, 200
Mechanical system with double roll guides inside of profile.

Modular Linear Actuator
DSR 120, 160, 200
Mechanical system with double roll guides inside of profile.

Velocity:
max. 6 m/sec

Variation:

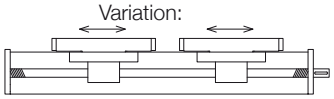

DL DS

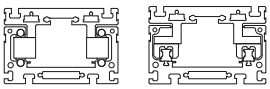

Modular Linear Actuator
DLT/DLK 120, 160, 200
Mechanical system with double roll guides inside of profile. System is driven by an integrated Acme thread or ballscrew.

Modular Linear Actuator
DST/DSK 120, 160, 200
Mechanical system with a double integrated ball rail inside of profile. System is driven by an integrated Acme thread or ballscrew.

	Repeating accuracy:	**Velocity:**
Acme thread:	± 0,2 mm	max. 0,5 m/s
Ballscrew:	± 0,025 mm	max. 1 m/s

Modular Linear Actuator
DLZA 120, 160, 200
Rack and pinion system for high dynamic operations.

Repeating accuracy:
± 0,2 mm
Velocity:
max. 3 m/sec

DL DS

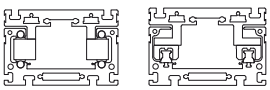

Modular Linear Actuator
DLM/DLVM 120, 160, 200
Mechanical system with double roll guides inside of profile. Driven by linear motor.

Modular Linear Actuator
DSM 160, 200

Mechanical system with a double integrated ball rail inside of profile. Driven by linear motor.

Repeating accuracy:
± 0,1 mm
Velocity:
max. 8 m/sec

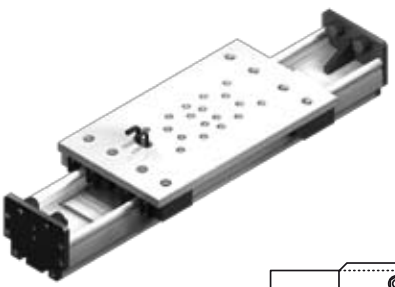

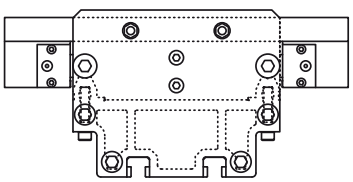

Modular Linear Actuator
ALLM 203, 204
Mechanical system with roll guides outside of profile.
Driven by linear motor.

Modular Linear Actuator
ALLZ 203, 204
Mechanical system with roll guides outside of profile.
Belt driven

Modular Linear Actuator
ALLR 203, 204
Same function as ALLM but without motor.

Repeating accuracy:
± 0,05mm
Velocity:
max. ± 0,05 bis 4.000 mm, ± 0,1 >4.000 mm

Product Line Overview

Modular Linear Actuator
QSZE 60, 80, 100
Like QSZ, but enclosed with a stainless steel casing and components.

Modular Linear Actuator
QLZE 60, 80, 100
Like QLZ, but enclosed with a stainless steel casing and components.

Repeating accuracy:
± 0,1 mm
Velocity:
max. 4 m/sec

QL **QS**

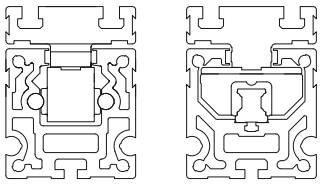

Modular Linear Actuator
QST/KE 60, 80, 100
Like QST/K, but enclosed with a stainless steel casing and components.

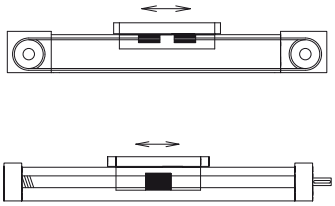

Fraunhofer TESTED DEVICE IPA
Lineareinheit QLZ 80
Report No. BA 0005-171

Modular Linear Actuator
ELBZ R800
Based on the EL series. This bow system is available with a radius of 800 mm. The system is driven by a carriage on an external belt.

Spare parts
Carriages, V-slides, wiper end plates, jointing plates for closed carriage, rollers, end plates, eccentrics, guide rods, cover bands, lubricants, ball- and Acme screws, spindles, leading-nuts, belts, belt pulleys, plug-in shafts, belt adjusters.

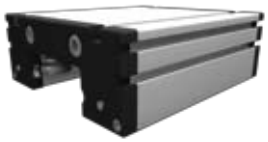

Accessories
Slide nuts, handwheels, positional indicators, spindle clamps, carrier clamps, plates, mounting blocks, switch holders, cable cover tubes, cable chains, switches, activating strips, motor adapters, couplings, bevel gears, combination cubes, cover caps, gearboxes, keyed shafts, bellows, toothed pulleys, toothed belts.

Drives
Stepping motors, gears, control units, gearboxes.

Product Index

Acme Screw or Ball Screw Driven Modular Linear Actuators EL, EG	1.1
Non-Driven Modular Linear Actuators E, EL, UL	2.1
Belt Driven Modular Linear Actuators ELZ, ELZex, ELZG, ELZZ, ELSZ, ELSD, ELZT, ELHZ, ELVZ, ELFZ, ELZU, MLZ	3.1
Rack and Pinion Driven Modular Linear Actuators ELZA, ELZQ	4.1
Roller Guide Modular Linear Actuators QL	5.1
Rail Guide Modular Linear Actuators QS	6.1
Roller Guide Modular Linear Actuators DL	7.1
Rail Guide Modular Linear Actuators DS	8.1
Roller Guide Modular Linear Actuators DLM, DLVM Rail Guide Modular Linear Actuators DSM	9.1
Roller Guide Modular Linear Actuators ALLM, ALLZ, ALLR	10.1
Stainless Steel Modular Linear Actuators QLZE, QSZE, QST/KE Modular Linear Actuators ELBZ Curve	11.1
Spare parts	1.2
Accessories	2.2
Belt & Screw Critical Speeds & Application Specifications	3.2
Motors and Control Units	4.2
Ordering Templates	5.2

Index

Modular Linear Actuator

	Chapter/Page
Acme Screw or Ball Screw Driven Modular Linear Actuators EL, EG	
EGT – EGK	1.1/2 – 4
EGZ	1.1/6 – 7
EHT – EHK	1.1/8 – 9
ELT – ELK	1.1/10 – 12
Non-Driven Modular Linear Actuators E, EL, UL	
ELR	2.1/2 – 3
ELRZ	2.1/4
ER	2.1/5
E	2.1/6 – 7
UL	2.1/8 – 9
Belt Driven Modular Linear Actuators ELZ, ELZex, ELZG, ELZZ, ELSZ, ELSD, ELZT, ELHZ, ELVZ, ELFZ, ELZU, MLZ	
ELZ (ex)	3.1/2 – 6
ELZG	3.1/7
ELZZ	3.1/8 – 9
ELSZ with standard belt performance	3.1/10 – 11
ELSZ with belt widening	3.1/12 – 13
ELSD with standard belt performance	3.1/14 – 15
ELSD with belt widening	3.1/16 – 17
ELZT	3.1/18 – 19
ELHZ	3.1/22 – 23
ELVZ	3.1/24 – 26
ELFZ (ex)	3.1/28 – 31
ELZU	3.1/32 – 33
MLZ	3.1/34 – 35
Rack and Pinion Driven Modular Linear Actuators ELZA, ELZQ	
ELZA	4.1/2 – 3
ELZQ	4.1/4 – 5
Roller Guide Modular Linear Actuators QL	
QLZ	5.1/2 – 3
QLR	5.1/4 – 5
Rail Guide Modular Linear Actuators QS	
QSZ	6.1/2 – 3
QSSZ	6.1/4 – 5
QST – QSK	6.1/6 – 8
QSR	6.1/10 – 11
QSSR	6.1/12 – 13
Roller Guide Modular Linear Actuators DL	
DLT – DLK	7.1/2 – 4
DLZ	7.1/6 – 7
DLZA	7.1/8 – 9
DLSZ	7.1/10 – 11
DLVZ	7.1/14 – 15
DLR	7.1/16 – 17
Dust sealing D 200	7.1/18
Rail Guide Modular Linear Actuators DS	
DST – DSK	8.1/2 – 4
DSZ	8.1/6 – 7
DSSZ	8.1/8 – 9
DSR	8.1/10 – 11

	Chapter/Page
Roller Guide Modular Linear Actuators DLM, DLVM	
Rail Guide Modular Linear Actuators DSM	
DLM	9.1/2 – 3
DLVM	9.1/4 – 5
DSM	9.1/6 – 7
Digital controller and linear encoder	9.1/8
Roller Guide Modular Linear Actuators ALLM, ALLZ, ALLR	
ALLM	10.1/2 – 3
ALLZ	10.1/4 – 5
ALLR	10.1/6 – 7
Stainless Steel Modular Linear Actuators QLZE, QSZE, QST/KE	
Curve Modular Linear Actuators ELBZ	
QLZE	11.1/2 – 3
QSZE	11.1/4 – 5
QST/KE	11.1/6 – 7
ELBZ R800	11.1/8 – 9
Spare parts	
Carriage complete for EG, EL, DL, DS, UL	1.2/2
Carriage complete for QL, QS	1.2/3
V-slide EG	1.2/3
Carriage roller	1.2/3
Carriage roller block, eccentric, runner blocks	1.2/4
Eccentric keys, wiper end plate, slider	1.2/5
Cover band, jointing plate	1.2/6
Guide rod	1.2/6
Acme spindle, Acme screw	1.2/7
Ballscrew spindle, ballscrew nut	1.2/8
Leading nut receiver, lubricants, cover caps	1.2/9
Toothed belt	1.2/10
Toothed pulleys	1.2/11 – 13
Plug-in shafts, tensioning sets	1.2/13
Belt-adjuster	1.2/14
Accessories	
Square nuts, T-nuts, rhombus nut, half round nut,	2.2/2
Mounting possibility	2.2/3
Handwheel, positional indicator, spindle clamp	2.2/4
Carriage clamp, assembly plates	2.2/5 – 9
Support and mounting blocks	2.2/5 – 9
Limit switch, proximity switch	2.2/10 – 11
Activating strip, cable conduit, cable chain	2.2/12
Coupling, tension sets	2.2/13
bellows	2.2/14
Bevel gear pair, combination cube, motor adapter	2.2/15
Bevel gear, angular gear, transmission unit	2.2/16
Splined shaft	2.2/17
Toothed pulley, toothed belt	2.2/18
Parallel transfer unit	2.2/18
Incremental encoder	2.2/18
Toothed belt gearing	2.2/19
Inline and Right Angle Gear Box	2.2/20
Belt & Screw Critical Speeds & Application Specifications	3.2/1 - 3.2/4
Motors and Control Units	4.2/1 - 4.2/2
Ordering Templates	5.2/1 - 5.2/7
Index	5.2/8

www.nookindustries.ru (499) 703 35 98 sell@nookindustries.ru

Acme Screw or Ball Screw Driven Modular Linear Actuators EL, EG

Modular Linear Actuator
EGT/EGK 30, 40, 60, 80

Screw Driven with Acme or Ballscrew Screw

Specifications

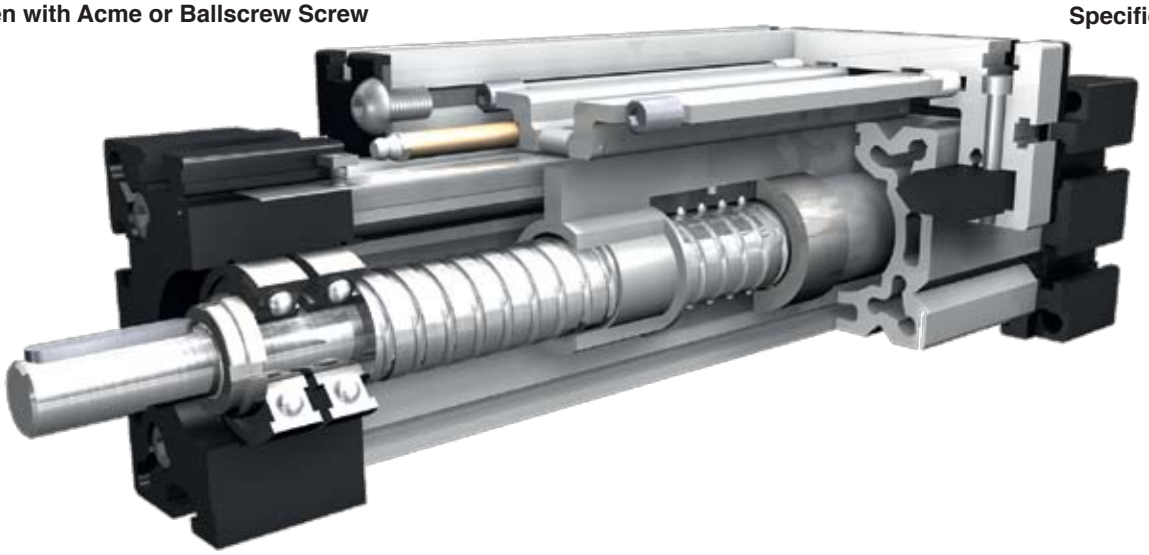

Function:
This unit consists of an aluminium square profile with lateral V-guides. The carriage, which is driven by means of an acme or ball screw, moves along the unit guided by V-slides that are adjustable free of play. Where two linear units are used in parallel or where two carriages are mounted on one unit, the leading-nut receiver can be used to adjust the symmetry of the carriages. The linear opening of the unit is sealed with a stainless steel cover band to make the unit splash-proof and dust-tight.

Fitting position: As required. Max. length 3.000 mm
Carriage mounting: T-slots, tapped holes (size 40)
Unit mounting: By T-slots or tapped holes in the bearing block, mounting sets.

Forces and torques

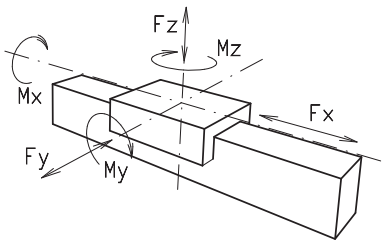

Size	EG 30		EG 40		EG 60		EG 80	
Forces / Torques	static	dynamic	static	dynamic	static	dynamic	static	dynamic
F_x (N)	750	600	1500	1200	2500	2000	4200	3500
F_y (N)	90	60	350	315	500	450	1000	900
F_z (N)	90	60	500	450	750	675	1125	1000
M_x (Nm)	10	5	20	18	33	30	82	75
M_y (Nm)	13	6	44	40	77	70	220	200
M_z (Nm)	14	7	33	30	55	50	165	150

All forces and torques relate to the following:

existing values / table values: $\frac{F_y}{F_{y_{dyn}}} + \frac{F_z}{F_{z_{dyn}}} + \frac{M_x}{M_{x_{dyn}}} + \frac{M_y}{M_{y_{dyn}}} + \frac{M_z}{M_{z_{dyn}}} \leq 1$

No-load torque								
Acme thread	10x3	-	18x4	18x8	24x5	24x10	28x5	28x10
(Nm)	0,4	-	0,70	0,70	0,50	0,80	0,80	1,0
Ballscrew	8x2,5	-	16x5	16x10	25x5	25x10	32x5	32x10
(Nm)	0,25	-	0,40	0,60	0,40	0,70	0,80	1,0

Geometrical moments of inertia of aluminium profile				
I_x mm^4	$4{,}09 \times 10^4$	$1{,}35 \times 10^5$	$5{,}65 \times 10^5$	$19{,}14 \times 10^5$
I_y mm^4	$4{,}00 \times 10^4$	$1{,}48 \times 10^5$	$6{,}12 \times 10^5$	$20{,}12 \times 10^5$
Elastic-modulus N/mm²	70000	70000	70000	70000

Formula: EGT/K

Driving torque:

$$M_a = \frac{F \cdot P \cdot S_i \cdot w}{2000 \cdot \pi \cdot \mu} + M_{leer}$$

$$P_a = \frac{M_a \cdot n}{9550}$$

F	= force	(N)
P	= thread pitch	(mm)
S_i	= safety factor 1,2 ... 2	
M_{leer}	= no-load torque	(Nm)
n	= rpm of screw	(min^{-1})
M_a	= driving torque	(Nm)
μ	= screw efficiency	
w	= friction coefficient	~ 1,22
P_a	= motor power	(KW)

Efficiency of lead screws:

All ballscrews:	0.900		
Tr 10x3	0.375		
Tr 18x4	0.399	Tr 18x8	0.565
Tr 24x5	0.384	Tr 24x10	0.550
Tr 28x5	0.349	Tr 28x10	0.513

$$f = \frac{F \cdot L^3}{E \cdot I \cdot 192}$$

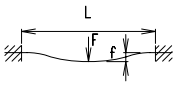

f	= deflection	(mm)
F	= load	(N)
L	= free length	(mm)
E	= elastic modulus 70000	(N/mm²)
I	= second moment of area	(mm⁴)

Modular Linear Actuator
EGT/EGK 30, 40, 60, 80

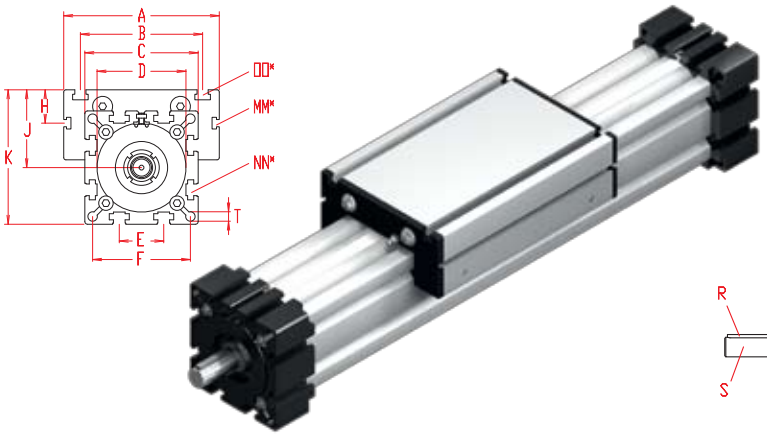

Dimensions (mm)

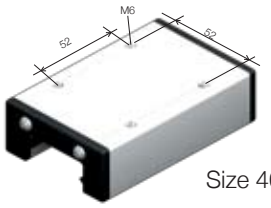

Size 40 without T-slots

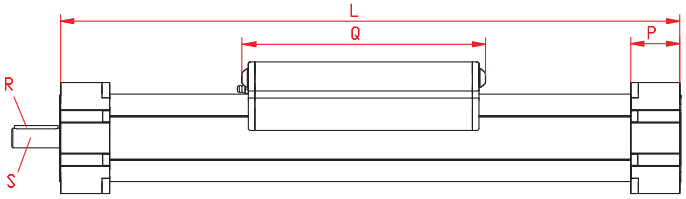

*For slide nuts refer to chapter 2.2 page 2 Increasing the carriage length will increase the basic length by the same amount.

Size	Basic length L	A	B	C	D	E	F	H	J	K	MM for	NN for	OO for	P	Q	R	S Ø x length	T	Basic weight	Weight per 100 mm
EG 30	120	70	56	42	40x1	13	35	-	26	47	-	M 6	M 6	18	82	-	5x15	4,2	0,6 kg	0,16 kg
EG 40	169	70	-	58	48x1	18	47	-	35	64	-	M 6	M 6	25	117	3x3x25	10x27	6,5	1,3 kg	0,36 kg
EG 60	235	100	80	82	62x1	30	69	-	49	90	-	M 8	M 8	35	165	5x5x28	14x35	8,5	4,0 kg	0,67 kg
EG 80	286	140	110	102	80x1	40	88	30	70	121	M 6	M 10	M 10	45	194	6x6x40	18x45	8,5	6,7 kg	1,14 kg

Screw:
T **(T)** Acme screw **(K)** Ballscrew

Selection of screw:
1 **(1)** right hand **(2)** left hand (Ballscrew by inquiry)

Choice of guide body profile:
0 **(0)** Standard **(1)** stainless guide rods (only size 30) **(2)** stainless guide rods and screws (only size 30)

Choice of carriages:

0 **(0)**

(1)

Size	Version 1	
	Q	L
30	94	132
40	133	185
60	181	253
80	210	302

Choice of journal:
0 **(0)** one shaft (locating bearing side) **(1)** one shaft (non-locating bearing side) **(2)** shaft on both sides

Selection of screw:
0

Size	Standard acme screw	Multistart screw	Standard ballscrew	Multistart screw	
30	**(0)** Tr 10x3		**(0)** Kg 8x2,5		
40	**(0)** Tr 18x4	**(1)** Tr 18x8	**(0)** Kg 16x5	**(1)** Kg 16x10	**(2)** Kg 16x16
60	**(0)** Tr 24x5	**(1)** Tr 24x10	**(0)** Kg 25x5	**(1)** Kg 20x20	**(2)** Kg 25x10
80	**(0)** Tr 28x5	**(1)** Tr 28x10	**(0)** Kg 32x5	**(1)** Kg 25x25	**(2)** Kg 32x10

Ballscrew pitch accuracy:
0 **(0)** 0,1 mm / 300 mm (Standard) **(1)** 0,05 mm / 300 mm **(2)** 0,025 mm / 300 mm

End play of ball nut:
0 **(0)** 0,04 mm (Standard), **(1)*** < 0,02 mm, **(2)*** 2% apply prestress
*only in combination with **pitch accuracy (1)** or **(2)**

Repeatability:
± 0,2 mm Acme
± 0,25 mm Ballscrew

1500 Basic Length + Stroke + Overtravel** = total length **Minimum 25mm on each end

For combination kits and connecting elements refer to accessory section

EG	T	40	1	0	0	0	0	0	0	01500
		Pos.	1	2	3	4	5	6	7	

Sample ordering code:
EGT40, Acme screw right hand thread, standard body profile, top carriage, one shaft (locating bearing side), Screw 18x4, 1331 mm stroke

Modular Linear Actuator
EGT/EGK 30, 40, 60, 80

With Acme Thread or Ballscrew, Right-Hand and Left-Hand Thread or Divided Screws

Dimensions (mm)

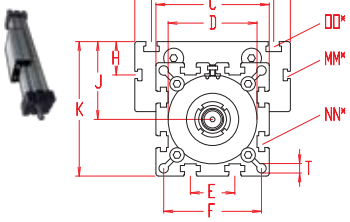

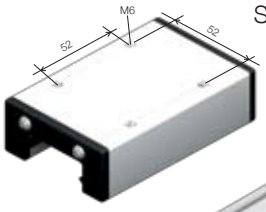

Size 40 without T-slots

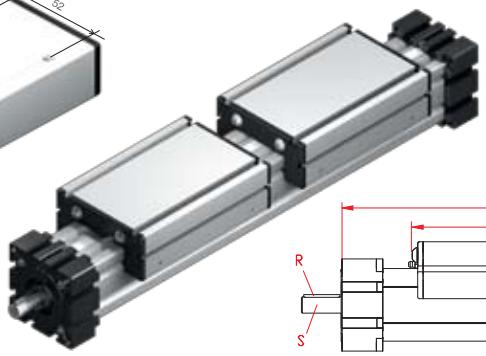

Increasing the carriage length will increase the basic length by the same amount.

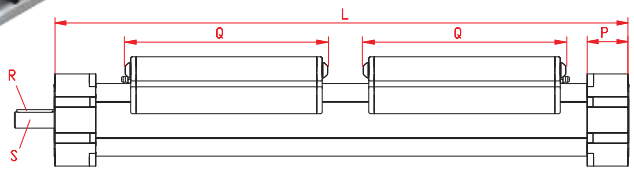

*For slide nuts refer to chapter 2.2 page 2

Size	Basic length L	A	B	C	D	E	F	H	J	K	MM for	NN for	OO for	P	Q	R	S Ø x length	T	Basic weight	Weight per 100 mm
EG 30	202	70	56	42	40x1	13	35	-	26	47	-	M 6	M 6	18	82	-	5x15	4,2	1,0 kg	0,16 kg
EG 40	286	70	-	58	48x1	18	47	-	35	64	-	M 6	M 6	25	117	3x3x25	10x27	6,5	2,5 kg	0,36 kg
EG 60	402	100	80	82	62x1	30	69	-	49	90	-	M 8	M 8	35	165	5x5x28	14x35	8,5	6,2 kg	0,67 kg
EG 80	480	140	110	102	80x1	40	88	30	70	121	M6	M 10	M 10	45	194	6x6x40	18x46	8,5	12,0 kg	1,14 kg

T **Screw:**
(T) Acme screw **(K)** Ballscrew

3 **Selection of screw:**
(3) right - left hand **(4)** divided Screw

0 **Choice of guide body profile:**
(0) Standard **(1)** stainless guide rods (only size 30) **(2)** stainless guide rods and screws (only size 30)

Choice of carriages:

0

(0)

(1)

Size	Version 1	
	Q	L
30	94	226
40	133	318
60	181	434
80	210	512

0 **Choice of journal:**
(0) shaft right hand thread **(1)** shaft left hand thread **(2)** shaft on both sides

0 **Selection of screw:**

Size	Standard acme screw	Multistart screw acme screw	Standard ballscrew	Multistart screw ballscrew
30	**(0)** Tr 10x3		**(0)** Kg 8x2,5*	
40	**(0)** Tr 18x4	**(1)** Tr 18x8	**(0)** Kg 16x5	**(1)** Kg 16x10*
60	**(0)** Tr 24x5	**(1)** Tr 24x10	**(0)** Kg 25x5	**(1)** Kg 20x20* / **(2)** 25x10*
80	**(0)** Tr 28x5	**(1)** Tr 28x10	**(0)** Kg 32x5	**(1)** Kg 25x25* / **(2)** 32x10*

* = only for selection of divided Screw

0 **Ballscrew pitch accuracy:**
(0) 0,1 mm / 300 mm (Standard) **(1)** 0,05 mm / 300 mm **(2)** 0,025 mm / 300 mm

0 **End play of ball nut:**
(0) 0,04 mm (Standard), **(1)*** < 0,02 mm, **(2)*** 2% apply prestress
* only in combination with **pitch accuracy (1)** or **(2)**

Repeatability:
± 0,2 mm Acme
± 0,025 mm Ballscrew

2200 Basic Length + Stroke + Overtravel** = total length **Minimum 25mm on each end

EG	T	40	3	0	0	0	0	0	0	02200
		Pos.	1	2	3	4	5	6	7	

For combination kits and connecting elements refer to accessory section

Sample ordering code:
EGT40, Acme right - left hand thread, standard body profile, 2 top carriage, one shaft on right hand side, Screw 18x4, 1914 mm stroke

Possible Mounting Styles

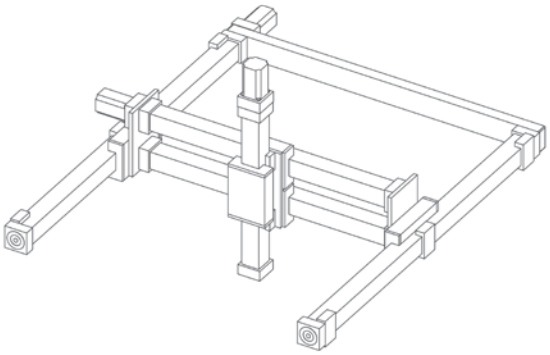

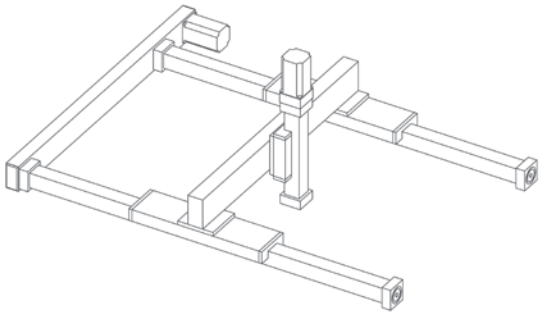

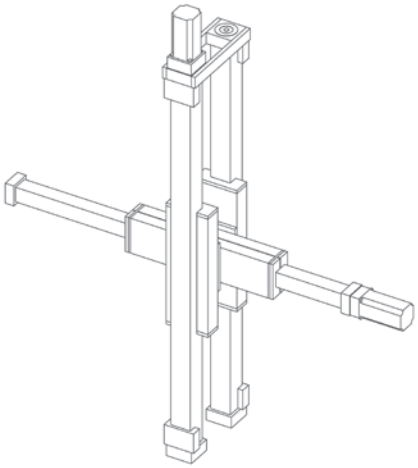

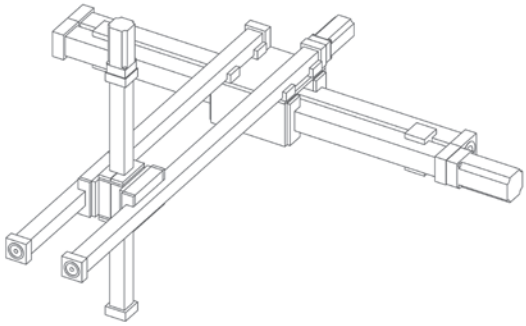

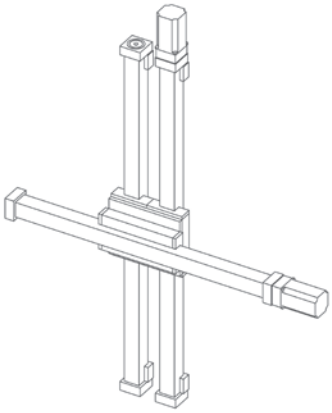

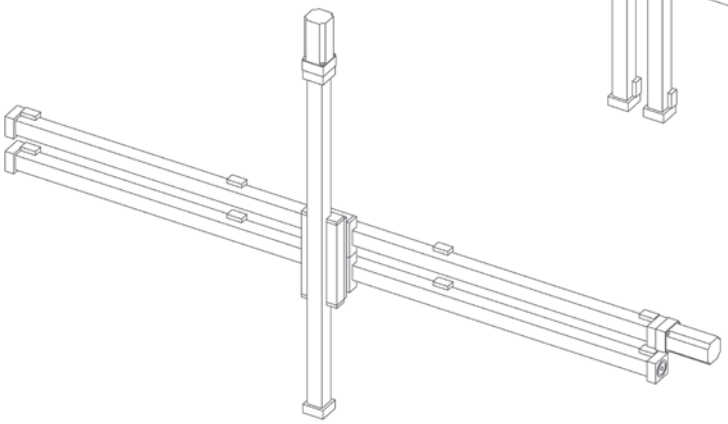

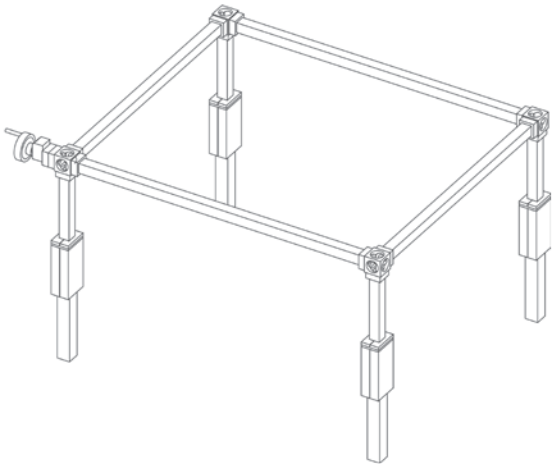

Modular Linear Actuator
EGZ 30, 40, 60, 60S, 80

Belt Driven

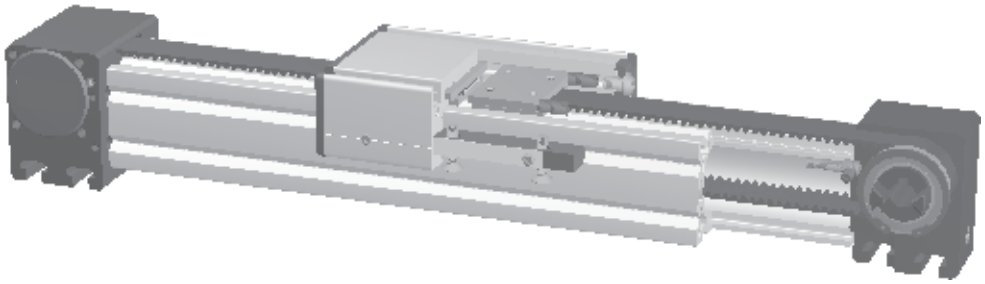

Function:
This linear unit consists of an aluminum square profile with lateral V-guides. The carriage that can be adjusted free of play is driven along the V-guides by a timing belt. The pulleys have maintenance-free ball bearings. Belt tension can be readjusted by a simple screw adjustment device in the carriage. This device can also be use for symmetrical adjustment of two or more linear units running parallel.

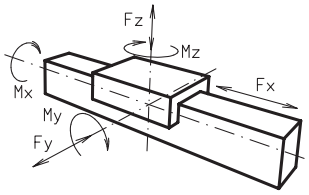

Forces and torques

Fitting length: As required. Max. length 6,000 mm without joints.
Carriage mounting: T-slots
Unit mounting: T-slots or tapped holes in the bearing block, mounting sets.
Belt type: HTD with steel reinforcement, no backlash when changing direction, repeatability: ± 0,1 mm.

Size	EGZ 30		EGZ 40		EGZ 60		EGZ 80	
Forces/Torques	static	dynamic	static	dynamic	static	dynamic	static	dynamic
F_x (N)	200	180	390	350	894	800	1900	1800
F_y (N)	90	60	350	315	500	450	1000	900
F_z (N)	90	60	500	450	750	675	1125	1000
M_x (Nm)	10	5	20	18	33	30	82	75
M_y (Nm)	13	6	44	40	77	70	220	200
M_z (Nm)	14	7	33	30	55	50	165	150

No-load torque

existing values / values of table

$$\frac{Fy}{Fy_{dyn}} + \frac{Fz}{Fz_{dyn}} + \frac{Mx}{Mx_{dyn}} + \frac{My}{My_{dyn}} + \frac{Mz}{Mz_{dyn}} \leq 1$$

Nm	0,2	0,3	0,6	0,9
Speed				
(m/sec) max	2	2	2	2
Tensile force				
permanent (N)	200	390	900	1900
0,2 sec (N)	280	480	1000	2090
Geometrical moments of inertia of aluminum profile				
I_x mm^4	$4{,}09 \times 10^4$	$1{,}4 \times 10^5$	$5{,}62 \times 10^5$	$19{,}23 \times 10^5$
I_y mm^4	$4{,}00 \times 10^4$	$1{,}47 \times 10^5$	$6{,}05 \times 10^5$	$20{,}09 \times 10^5$
E-Modu us N/mm^2	70000	70000	70000	70000

Formula: EGZ

Driving torque:

$$M_a = \frac{F*P*S_i}{2000*\pi} + M_{leer}$$

$$P_a = \frac{M_a*n}{9550}$$

F	= force	(N)
P	= pulley action perimeter	(mm)
S_i	= safety factor 1,2 … 2	
M_{leer}	= no-load torque	(Nm)
n	= rpm pulley	(min^{-1})
M_a	= driving torque	(Nm)
P_a	= motor power	(KW)

$$f = \frac{F*L^3}{E*I*192}$$

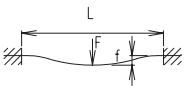

f	= deflection	(mm)
F	= load	(N)
L	= free length	(mm)
E	= elastic modulus 70000	(N/mm^2)
I	= second moment of area	(mm^4)

nookindustries.com toll-free 1 (800) 321-7800
www.nookindustries.ru (499) 703 35 98 sell@nookindustries.ru

Modular Linear Actuator
EGZ 30, 40, 60, 80

Dimensions (mm)

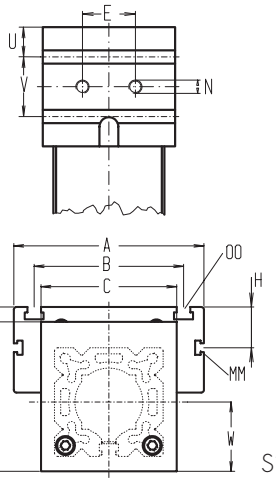

Size 40 without T-slots

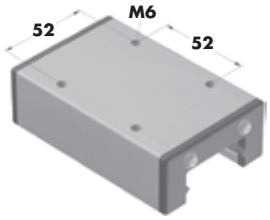

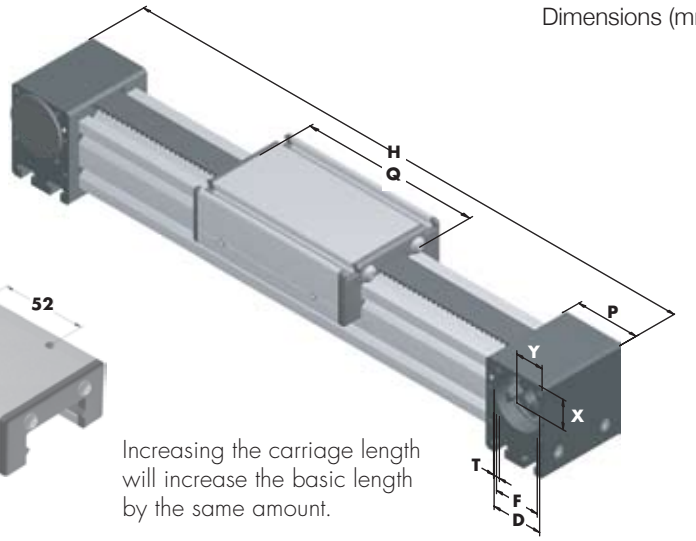

Increasing the carriage length will increase the basic length by the same amount.

Size	Basic length L	A	B	C	D	E	F	H	J	K	MM	N	OO	P	Q	T	U	V	W	X	Y	Basic weight	Additional Weight per 100 mm
EGZ30	158	70	56	42	28	13	25	-	44	47	-	M 5	M 6	36	82	M 4	-	-	21	16	16	0,8 kg	0,13 kg
EGZ40	225	70	-	58	37	18	32	-	58	64	-	M 6	M 6	49	118	M 5	12,5	24	29	20,5	20,5	1,74 kg	0,22 kg
EGZ60	290	100	80	80	47	30	42	-	82	90	-	M 8	M 8	59	164	M 6	15	30	41	27	26	4,32 kg	0,41 kg
EGZ80	375	140	110	100	68	40	60	30	110	121	M 6	M 10	M 10	90	193	M 8	22,5	45	51	39	38	9,36 kg	0,82 kg

Choice of guide body profile:

0

(0) Standard **(1)** stainless guide rods (only Size 30) **(2)** stainless guide rods and screws (only Size 30)

Choice of carriages:

0 **(0)**

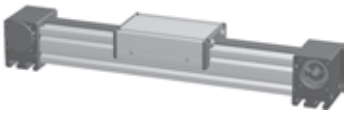

For standard carriage length see 'Q' in table. Non-standard length on request. The longer the carriage, the greater the load capacity.

(1)

Top and bottom carriages are rigidly joined, enabling higher loads to be applied. This increases the basic length by 12-16 mm. Thickness of jointing plate refer to accessory section.

Coupling - shaft mounting:

0

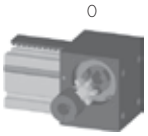

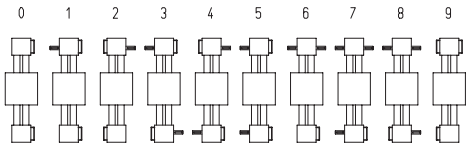

9 is as 0, but with jaw coupling on both sides.

The standard version is supplied without shaft. A shaft can be retrofitted by inserting in the pulley bore and securing with 2 locking rings.

Belt table

Code No.		Size	Belt	mm/rev.	Number of teeth
0	**1**	30	3M12	75	25
0	**3**	40	5M15	100	20
0	**4**	60	5M25	130	26
0	**7**	80	8M30	192	24

Shaft dimensions

Size	Shaft ø h6 x length	Key
30	6 x 15	2x2x12
40	10 x 27	3x3x25
60	14 x 35	5x5x28
80	18 x 45	6x6x40

Basic length + stroke = total length

EGZ	40	1	0	0	0	0	3	1	01500
	Pos.	1	2	3	4	5	6	7	

Sample ordering code:
EGZ 40 with standard body profile, standard carriage, jaw coupling on one side, 1275 mm stroke

Modular Linear Actuator
EHT/EHK 40, 60, 80, 100, 125

Screw Driven with Acme Screw or Ballscrew

Function:
The rotary movement of the Screw is translated into a linear movement. The result is a telescopic movement.

Fitting position: As required. Max. length size 40 = 500 mm, size 60 = 1000 mm, size 80 and 100 = 1500 mm
Unit mounting: By T-slots.

Forces and torques

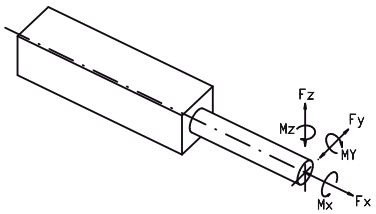

	static	dynam.	static	dynam.	static	dynam.	static	dynam.	static	dynam.
F_x (N)	800	550	1800	1200	2600	1500	3100	1900	6310	5050
F_y (N)	50	27	130	80	210	140	300	175	640	400
F_z (N)	50	27	130	80	210	140	300	175	640	400
M_x (Nm)	12	8	20	11	27	16	34	20	43	25
M_y (Nm)	25	13	95	60	190	110	290	180	738	600
M_z (Nm)	25	13	95	60	190	110	290	180	738	600

existing values / table values

$$\frac{Fy}{Fy_{dyn}} + \frac{Fz}{Fz_{dyn}} + \frac{Mx}{Mx_{dyn}} + \frac{My}{My_{dyn}} + \frac{Mz}{Mz_{dyn}} \leq 1$$

Acme	10 x 3		18 x 4	18 x 8	24x5	24x10	32x6	32x12	40x7/40x14
(Nm)	0,30		0,40	0,50	0,60	0,80	0,80	1,00	1,20/1,40
Ballscrew	12 x 5	12x10	16 x 5	16 x 10	20 x 5		32x5	32x10	40x10/40x20
(Nm)	0,20	0,40	0,20	0,40	0,40		0,60	0,80	1,00/1,20

I_x mm^4	$1{,}32 \times 10^5$	$6{,}79 \times 10^5$	$18{,}99 \times 10^5$	$44{,}4 \times 10^5$	$101{,}5 \times 10^5$
I_y mm^4	$1{,}34 \times 10^5$	$6{,}97 \times 10^5$	$18{,}97 \times 10^5$	$44{,}8 \times 10^5$	$101{,}5 \times 10^5$
E-modulus N/mm²	70000	70000	70000	70000	70000

Formula: EHT/K

Driving torque:

$$M_a = \frac{F*P*S_i*w}{2000*\pi*\mu} + M_{leer}$$

$$P_a = \frac{M_a*n}{9550}$$

F	= force	(N)
P	= thread pitch	(mm)
S_i	= safety factor 1,2 ... 2	
M_{leer}	= no-load torque	(Nm)
n	= rpm of screw	(min^{-1})
M_a	= driving torque	(Nm)
μ	= screw efficiency	
w	= friction coefficient	~ 1,22
P_a	= motor power	(KW)

Efficiency of lead screws:

All ballscrew	0.900		
Tr 10x3	0,375		
Tr 18x4	0,399	Tr 18x8	0,565
Tr 24x5	0,384	Tr 24x10	0,550
Tr 32x6	0,360	Tr 32x12	0,524
Tr 40x7	0,344	Tr 40x14	0,509

$$f = \frac{F*L^3}{E*I*192}$$

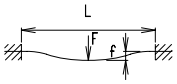

f =deflection	(mm)
F =load	(N)
L =free length	(mm)
E=elastic modulus 70000	(N/mm²)
I =second moment of area	(mm⁴)

Modular Linear Actuator
EHT/EHK 40, 60, 80, 100, 125

Dimensions (mm)

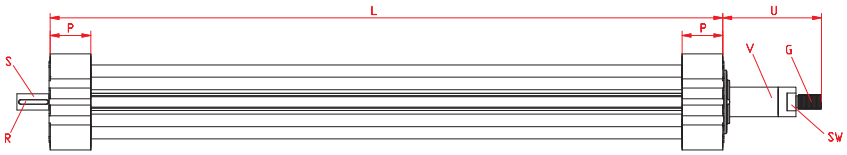

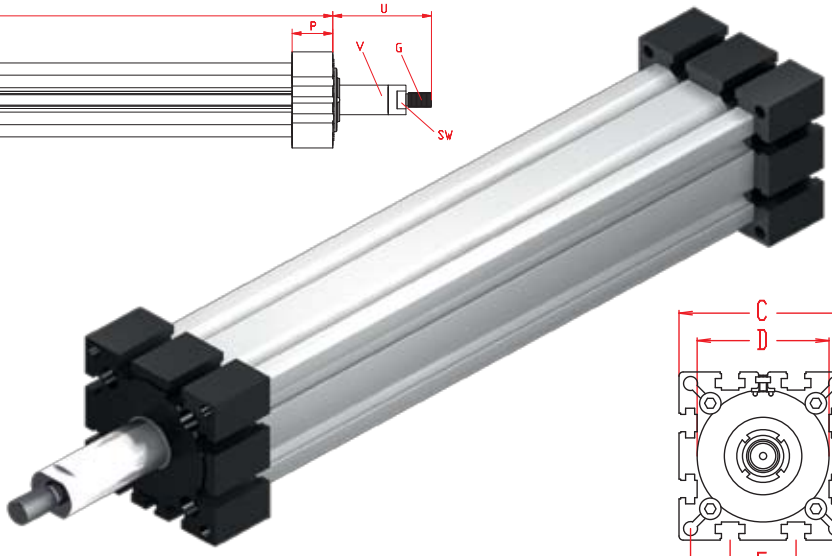

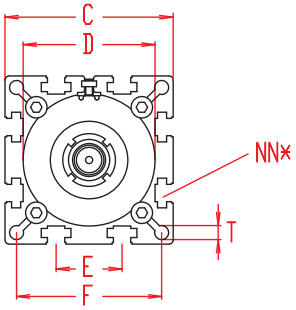

*For slide nuts refer to chapter 2.2 page 2

Size	Basic length L	C	D	E	F	G Ø x length	NN for	P	R	S Ø x length	SW	T	U	V Ø	Basic Weight	Weight per 100 mm
40	125	58	48x1	18	47	M 12 x 1,25 x 24	M 6	25	2x2x22	6x27	17	6,5	54	20	*	*
60	170	82	62x1	30	69	M 16 x 1,5 x 32	M 8	35	3x3x25	10x27	27	8,5	77	30	*	*
80	180	102	80x1	40	88	M 20 x 1,5 x 40	M 10	45	5x5x28	14x35	30	8,5	100	40	*	*
100	250	130	110x1	50	112	M 30 x 2 x 45	M 10	55	6x6x40	22x45	46	10,5	105	50	6,5 kg	2,10 kg
125	323	165	130x2	60	142	M 36 x 2 x 45	M 12	65	8x7x50	25x55	50	13	65	60	18,2 kg	3,20 kg

* Depends on screw selection
Contact factory

Screw:
K **(T)** Acme thread **(K)** Ballscrew

Selection of screw:
1 **(1)** right hand **(2)** left hand

Choice of guide body profile:
0 **(0)** Standard **(1)** stainless screws

Selection of screw:
0

Size	Standard Acme screw	Multistart screw	Standard ballscrew	Multistart screw
40	**(0)** Tr 10x3		**(0)** Kg 12x5	**(1)** Kg 12x10
60	**(0)** Tr 18x4	**(1)** Tr 18x8	**(0)** Kg 16x5	**(1)** Kg 16x10
80	**(0)** Tr 24x5	**(1)** Tr 24x10	**(0)** Kg 20x5	
100	**(0)** Tr 32x6	**(1)** Tr 32x12	**(0)** Kg 32x5	**(1)** Kg 32x10
125	**(0)** Tr 40x7	**(1)** Tr 40x14	**(0)** Kg 40x10	**(1)** Kg 40x20

Ballscrew pitch accuracy:
0 **(0)** 0,1 mm / 300 mm (Standard) **(1)** 0,05 mm / 300 mm **(2)** 0,025 mm / 300 mm

End play of ball nut:
0 **(0)** 0,04 mm (Standard), **(1)*** < 0,02 mm, **(2)*** 2% apply prestress
* only in combination with **pitch accuracy (1)** or **(2)**

680

Basic Length + Stroke + Overtravel** = total length
**Minimum 25mm on each end

Repeatability:
± 0,2 mm Acme
± 0,025 mm Ballscrew

EH	K	100	1	0	0	0	0	0	0	00680
		Pos.	1	2	3	4	5	6	7	

For combination kits and connecting elements refer to accessory section

Sample ordering code:
EHK100, ballscrew right hand thread, standard body profile, Screw 32x5, 430 mm stroke

Modular Linear Actuator
ELT/ELK 30, 40, 60, 60S, 80, 80S, 100, 125

Screw Driven with Acme or Ballscrew

Specifications

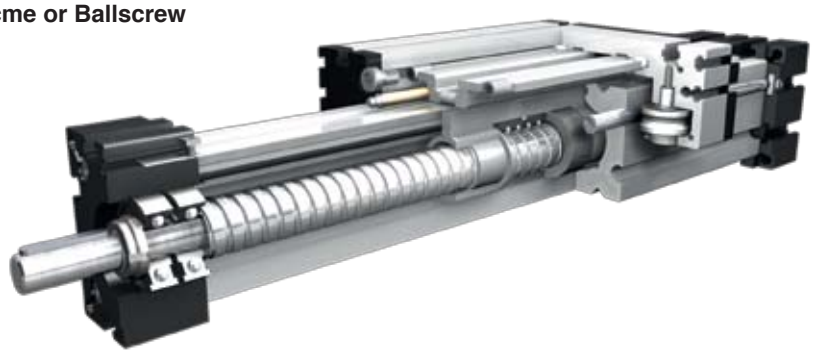

Function:
This linear unit consists of an aluminium hollow section with integral, parallel ground and hardened steel guide rods. The carriage has play-adjustable ball-bearing rollers which engage with the guide rods. The rotating ballscrew causes linear motion of the ballnut, which is connected to the carriage. The slot necessary for this is covered by a stainless steel strip, making the unit dust- and splash-proof. Lateral adjustment of movement for parallel units, or when two carriages are mounted on one unit, is provided by the ballnut mounting.

Forces and torques

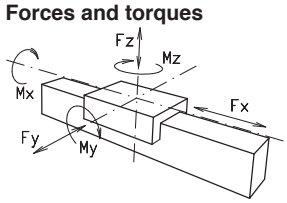

Fitting position: As required, max. length 3.000 mm
Carriage mounting: By T-slots and tapped holes
Unit mounting: By T-slots and tapped holes in the mounting surfaces.

Size	EL 30		EL 40		EL 60		EL 60 S		EL 80		EL 80S		EL 100		EL 125	
Forces/Torques	static	dyna.	static	dyna.	static	dyna.	static	dyna.	static	dyna.	static	dyna.	static	dyna.	static	dyna.
F_x (N)	750	600	1500	1200	2500	2000	2500	2000	5000	4000	5000	4000	10000	8000	15000	12000
F_y (N)	90	60	1200	700	3000	2000	4100	3100	3000	2000	4600	3600	8000	6500	12000	9000
F_z (N)	90	60	900	650	1700	1100	2160	1600	1700	1100	3000	1800	3600	2200	6000	4500
M_x (Nm)	12	10	25	20	67	43	88	65	90	55	170	140	300	230	600	450
M_y (Nm)	12	10	32	18	90	70	190	140	110	80	270	230	400	270	750	600
M_z (Nm)	15	12	35	25	120	100	230	170	150	120	300	220	750	500	1350	1150
All forces and torques relate to the following: existing values / table values $\frac{Fy}{Fy_{dyn}} + \frac{Fz}{Fz_{dyn}} + \frac{Mx}{Mx_{dyn}} + \frac{My}{My_{dyn}} + \frac{Mz}{Mz_{dyn}} \leq 1$																
No-load torque																
Acme	10x3		18x4/18x8		24x5/24x10		24x5/24x10		28x5/28x10		28x5/28x10		32x6/32x12		40x7/40x14	
(Nm)	0,3		0,4/0,5		0,6/0,8		0,6/0,8		0,8/1,0		0,8/1,0		0,9/1,1		1,2/1,4	
Ballscrew	8x2,5		16x5/16x10		25x5/25x10		25x5/25x10		32x5/32x10		32x5/32x10		32x5/32x10		40x10/40x20	
(Nm)	0,15		0,2/0,4		0,4/0,6		0,4/0,6		0,6/0,8		0,6/0,8		0,7/0,9		1,0/1,2	
Geometrical moments of inertia of aluminium profile																
I_x mm^4	$4{,}09 \times 10^4$		$1{,}32 \times 10^5$		$6{,}79 \times 10^5$		$6{,}79 \times 10^5$		$18{,}99 \times 10^5$		$18{,}99 \times 10^5$		$44{,}4 \times 10^5$		$101{,}5 \times 10^5$	
I_y mm^4	$4{,}00 \times 10^4$		$1{,}34 \times 10^5$		$6{,}97 \times 10^5$		$6{,}97 \times 10^5$		$18{,}97 \times 10^5$		$18{,}97 \times 10^5$		$44{,}8 \times 10^5$		$101{,}5 \times 10^5$	
E-Modulus N/mm^2	70000		70000		70000		70000		70000		70000		70000		70000	

For Roller lifetime calculation contact a Nook Application Engineer

Formula: ELT/K

Driving torque:

$$M_a = \frac{F*P*S_i}{2000*\pi*\mu} + M_{leer}$$

$$P_a = \frac{M_a*n}{9550}$$

F	= force	(N)
P	= thread pitch	(mm)
S_i	= safety factor 1,2 ... 2	
M_{leer}	= no-load torque	(Nm)
n	= rpm of screw	(min^{-1})
M_a	= driving torque	(Nm)
μ	= screw efficiency	
P_a	= motor power	(KW)

Efficiency of lead screws:

All ballscrew	0.900		
Tr 10x3	0,375	Tr 32x6	0,360
Tr 18x4	0,399	Tr 32x12	0,524
Tr 18x8	0,565	Tr 40x7	0,344
Tr 24x5	0,384	Tr 40x14	0,509
Tr 24x10	0,550		
Tr 28x5	0,349		
Tr 28x10	0,513		

$$f = \frac{F*L^3}{E*I*192}$$

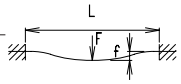

f =deflection	(mm)
F =load	(N)
L =free length	(mm)
E =elastic modulus 70000	(N/mm^2)
I =second moment of area	(mm^4)

nookindustries.com toll-free 1 (800) 321-7800
www.nookindustries.ru (499) 703 35 98 sell@nookindustries.ru

Modular Linear Actuator

ELT/ELK 30, 40, 60, 60S, 80, 80S, 100, 125

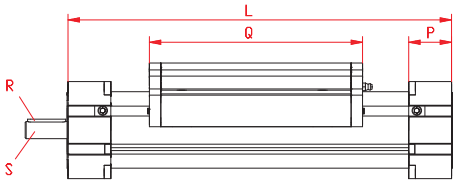

Increasing the carriage length will increase the basic length by the same amount.

Dimensions (mm)

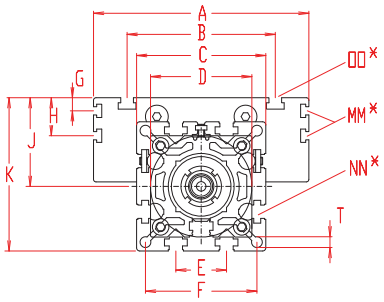

*For slide nuts refer to chapter 2.2 page 2

Size	Basic length L	A	B	C	D	E	F	G	H	J	K	MM for	NN for	OO for	P	Q	R	S Ø x length	T	Basic weight	Weight per 100 mm
EL 30	120	70	56	42	40x1	13	35	-	-	26	47	-	M 6	M 6	18	82	-	5x15	4,2	0,7 kg	0,16 kg
EL 40	175	100	66	58	48x1	18	47	--	-	35	64	-	M 6	M 6	25	122	3x3x25	10x27	6,5	1,7 kg	0,37 kg
EL 60	245	144	96	82	62x1	30	69	-	-	49	90	-	M 8	M 8	35	168	5x5x28	14x35	8,5	5,1 kg	0,89 kg
EL 60S	270	170	108	82	62x1	30	69	-	-	49	94	-	M 8	M 8	35	194	5x5x28	14x35	8,5	5,1 kg	0,89 kg
EL 80	285	170	117	102	80x1	40	88	10	30	70	121	M 6	M 10	M 10	45	194	6x6x40	18x45	8,5	10,0 kg	1,48 kg
EL 80S	305	190	126	102	80x1	40	88	12,5	30	71	122	M 6	M 10	M 8	45	214	6x6x40	18x45	8,5	11,0 kg	1,48 kg
EL 100	410	230	155	130	110x1	50	112	-	29	89	154	M 10	M 10	M 10	55	300	6x6x40	22x45	10,5	19,0 kg	2,00 kg
EL 125	510	295	200	165	130x1	60	142	-	30	107,5	190	M 10	M 12	M 12	65	365	8x7x50	25x55	13,0	33,0 kg	2,89 kg

Screw:
[T] **(T)** Acme **(K)** Ballscrew

Selection of screw:
[1] **(1)** right hand **(2)** left hand (Ballscrew by inquiry)

Choice of guide body profile:
[0] **(0)** Standard **(1)** stainless guide rod **(2)** stainless guide rods and screws **(3)** stainless guide rods, rollers and screws

Choice of carriages:
[0]

(0)

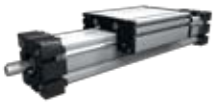

(1)

Size	Version 1	
	Q	L
30	94	132
40	138	191
60	184	261
60S	214	290
80	210	301
80S	234	325
100	316	426
125	389	534

Choice of journal:
[0] **(0)** one shaft (locating bearing side) **(1)** one shaft (non-locating bearing side) **(2)** shaft on both sides

Selection of screw:
[0]

Size	Standard Acme	Multistart screw Acme	Standard ballscrew	Multistart screw ballscrew		
30	**(0)** Tr 10x3		**(0)** Kg 8x2,5			
40	**(0)** Tr 18x4	**(1)** Tr 18x8	**(0)** Kg 16x5	**(1)** Kg 16x10	**(2)** Kg 16x16	
60	**(0)** Tr 24x5	**(1)** Tr 24x10	**(0)** Kg 25x5	**(1)** Kg 20x20	**(2)** Kg 25x10	**(3)** Kg 20x50
80	**(0)** Tr 28x5	**(1)** Tr 28x10	**(0)** Kg 32x5	**(1)** Kg 25x25	**(2)** Kg 32x10	
100	**(0)** Tr 32x6	**(1)** Tr 32x12	**(0)** Kg 32x5	**(1)** Kg 32x10	**(2)** Kg 32x20	**(3)** Kg 32x32
125	**(0)** Tr 40x7	**(1)** Tr 40x14	**(0)** Kg 40x10	**(1)** Kg 40x20	**(2)** Kg 40x40	

Ballscrew pitch accuracy:
[0] **(0)** 0,1 mm / 300 mm (Standard) **(1)** 0,05 mm / 300 mm **(2)** 0,025 mm / 300 mm

End play of ball nut:
[0] **(0)** 0,04 mm (Standard), **(1)*** < 0,02 mm, **(2)*** 2% apply prestress
* only in combination with **pitch accuracy (1)** or **(2)**

[1500]

Basic Length + Stroke + Overtravel** = total length
**Minimum 25mm on each end

Repeatability:
± 0,2 mm Acme
± 0,025 mm Ballscrew

EL	T	40	1	0	0	0	0	0	0	01500
		Pos.	1	2	3	4	5	6	7	

For combination kits and connecting elements refer to accessory section

Sample ordering code:
ELT40, Acme right hand thread, standard body profile, top carriage, one shaft (locating bearing side), Screw 18x4, 1325 mm stroke

Modular Linear Actuator
ELT/ELK 30, 40, 60, 60S, 80, 80S, 100, 125

With Acme Screw or Ballscrew, Right-Hand and Left-Hand Thread or Divided Screws

Dimensions (mm)

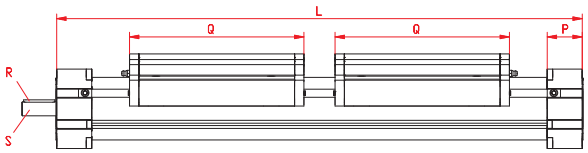

Increasing the carriage length will increase the basic length by the same amount.

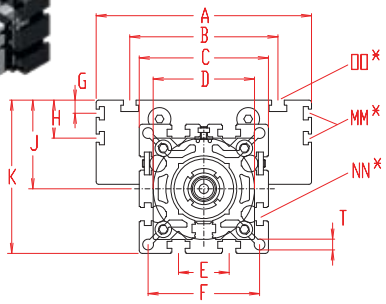

*For slide nuts refer to chapter 2.2 page 2

Size	Basic length L	A	B	C	D	E	F	G	H	J	K	MM for	NN for	OO for	P	Q	R	S Ø x length	T	Basic weight	Weight per 100 mm
EL 30	202	70	56	42	40x1	13	35	-	-	26	47	-	M 6	M 6	18	82	-	5 x 15	4,2	1,1 kg	0,16 kg
EL 40	300	100	66	58	48x1	18	47	-	-	35	64	-	M 6	M 6	25	122	3x3x25	10 x 27	6,5	2,5 kg	0,37 kg
EL 60	410	144	96	82	62x1	30	69	-	-	49	90	-	M 8	M 8	35	168	5x5x28	14 x 35	8,5	8,1 kg	0,89 kg
EL 60S	460	170	108	82	62x1	30	69	-	-	49	94	-	M 8	M 8	35	194	5x5x28	14 x 35	8,5	10,1 kg	0,89 kg
EL 80	480	170	117	102	80x1	40	88	10	30	70	121	M 6	M10	M10	45	194	6x6x40	18 x 45	8,5	15,0 kg	1,48 kg
EL 80S	520	190	126	102	80x1	40	88	12,5	30	71	122	M 6	M10	M 8	45	214	6x6x40	18 x 45	8,5	17,0 kg	1,48 kg
EL 100	720	230	155	130	110x1	50	112	-	29	89	154	M10	M10	M10	55	300	6x6x40	22 x 45	10,5	32,0 kg	2,00 kg
EL 125	880	295	200	165	130x1	60	142	-	30	107,5	190	M10	M12	M12	65	365	8x7x50	25 x 55	13	48,0 kg	2,89 kg

Screw:
(T) Acme **(K)** Ballscrew

Selection of screw:
(3) right - left hand **(4)** divided screw

Choice of guide body profile:
(0) Standard **(1)** stainless guide rod **(2)** stainless guide rods and screws **(3)** stainless guide rods, rollers and screws

Choice of carriages:

(0)

(1)

Size	Version 1	
	Q	L
30	94	226
40	138	232
60	184	442
60S	214	290
80	210	512
80S	234	560
100	316	752
125	389	928

Choice of journal:
(0) shaft right hand thread **(1)** shaft left hand thread **(2)** shaft on both sides

Selection of screw:

Size	Standard Acme	Multistart screw Acme	Standard ballscrew	Multistart screw ballscrew
30	**(0)** Tr 10x3		**(0)** Kg 8x2.5*	
40	**(0)** Tr 18x4	**(1)** Tr 18x8	**(0)** Kg 16x5	**(1)** Kg 16x10* **(1)** Kg 16x16*
60	**(0)** Tr 24x5	**(1)** Tr 24x10	**(0)** Kg 25x5	**(1)** Kg 20x20* **(2)** Kg 25x10*
80	**(0)** Tr 28x5	**(1)** Tr 28x10	**(0)** Kg 32x5	**(1)** Kg 25x25* **(2)** Kg 32x10*
100	**(0)** Tr 32x6	**(1)** Tr 32x12	**(0)** Kg 32x5	**(1)** Kg 32x10* **(2)** Kg 32x20* **(3)** Kg 32x32*
125	**(0)** Tr 40x7	**(1)** Tr 40x14	**(0)** Kg 40x10	**(1)** Kg 40x20* **(2)** Kg 40x40*

* = only for selection of devided Screw

Ballscrew pitch accuracy:
(0) 0,1 mm / 300 mm (Standard) **(1)** 0,05 mm / 300 mm **(2)** 0,025 mm / 300 mm

End play of ball nut:
(0) 0,04 mm (Standard), **(1)*** < 0,02 mm, **(2)*** 2% apply prestress
* only in combination with **pitch accuracy (1)** or **(2)**

Repeatability:
± 0,2 mm Acme
± 0,025 mm Ballscrew

2200 Basic Length + Stroke + Overtravel** = total length **Minimum 25mm on each end

EL	T	40	3	0	0	0	0	0	0	02200
		Pos.	1	2	3	4	5	6	7	

For combination kits and connecting elements refer to accessory section

Sample ordering code:
ELT40, Acme right - left hand thread, standard body profile, 2 top carriage, shaft on right hand side, Screw 18x4, 1900 mm stroke

Non-Driven Modular Linear Actuators E, EL, UL

Modular Linear Actuator
ELR 30, 40, 60, 60S, 80, 80S, 100, 125

Roller Guide Unit Without Drive **Specifications**

Function:
This unit consists of an aluminium hollow section with integral, parallel ground and hardened steel guide rods. The carriage has play-adjustable ball bearing rollers which engage with the guide rods. Two bearing blocks without bearings are fitted. Actuation can be by pneumatic cylinder or other device, or the unit may be used as load-carrying linear slide.

Forces and torques

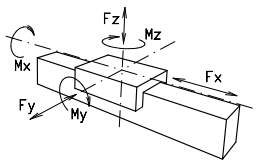

Fitting position: As required, max. length 6.000 mm
Carriage connection: By T-slots and tapped holes
Unit mounting: By T-slots and tapped holes in the mounting surface, mounting sets.

Size	ELR 30		ELR 40		ELR 60		ELR 60 S		ELR 80		ELR 80S		ELR 100		ELR 125	
Forces/Torques	static	dynam.	static	dynam.	static	dynam.	static	dynam.	static	dynam.	static	dynam.	static	dynam.	static	dynam.
F_x (N)	-	-	-	-	-	-	-	-	-	-	-	-	-	-	-	-
F_y (N)	90	60	1200	700	3000	2000	4100	3100	3000	2000	4600	3600	8000	6500	12000	9000
F_z (N)	90	60	900	650	1700	1100	2160	1600	1700	1100	3000	1800	3600	2200	6000	4500
M_x (Nm)	10	5	25	20	67	43	88	65	90	55	170	140	300	230	600	450
M_y (Nm)	13	6	32	18	90	70	190	140	110	80	270	230	400	270	750	600
M_z (Nm)	14	7	35	25	120	100	230	170	150	120	300	220	750	500	1350	1150
All forces and torques relate to the following: existing values / table values $\frac{Fy}{Fy_{dyn}} + \frac{Fz}{Fz_{dyn}} + \frac{Mx}{Mx_{dyn}} + \frac{My}{My_{dyn}} + \frac{Mz}{Mz_{dyn}} \leq 1$																
No-load torque																
max. (m/s)	3		4		5		5		6		8		10		10	
Geometrical moments of inertia of aluminium profile																
I_x mm^4	$4{,}09 \times 10^4$		$1{,}32 \times 10^5$		$6{,}79 \times 10^5$		$6{,}79 \times 10^5$		$18{,}99 \times 10^5$		$18{,}99 \times 10^5$		$44{,}4 \times 10^5$		$10{,}2 \times 10^6$	
I_y mm^4	$4{,}00 \times 10^4$		$1{,}34 \times 10^5$		$6{,}97 \times 10^5$		$6{,}97 \times 10^5$		$18{,}97 \times 10^5$		$18{,}97 \times 10^5$		$44{,}8 \times 10^5$		$10{,}2 \times 10^6$	
E-Modulus N/mm²	70000		70000		70000		70000		70000		7000		70000		70000	

Formula: ELR

For Roller lifetime calculation contact a Nook Application Engineer

$$f = \frac{F^*L^3}{E^*I^*192}$$

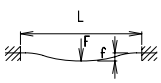

f = deflection (mm)
F = load (N)
L = free length (mm)
E = elastic modulus 70000 (N/mm²)
I = second moment of area (mm⁴)

Modular Linear Actuator

ELR 30, 40, 60, 60S, 80, 80S, 100, 125

Dimensions (mm)

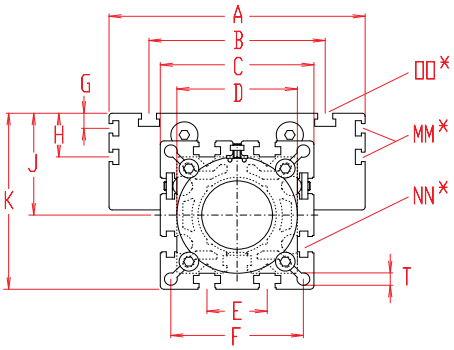

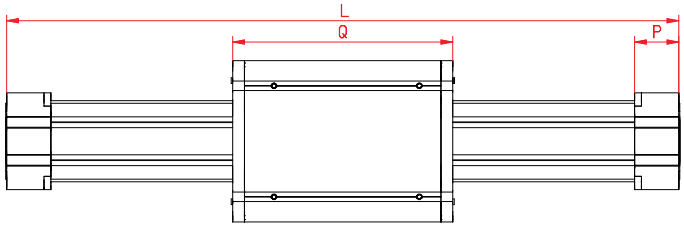

Increasing the carriage length will increase the basic length by the same amount.

*For slide nuts refer to chapter 2.2 page 2

Size	Basic length L	A	B	C	D	E	F	G	H	K	MM for	NN for	OO for	P	Q	T	Basic weight	Weight per 100 mm
ELR 30	120	70	56	42	40x1	13	35	-	-	47	-	M 6	M 6	18	82	4,2	0,5 kg	0,12 kg
ELR 40	175	100	66	58	48x1	18	47	-	-	64	-	M 6	M 6	25	122	6,5	0,9 kg	0,23 kg
ELR 60	245	144	96	82	62x1	30	69	-	-	90	-	M 8	M 8	35	168	8,5	3,1 kg	0,61 kg
ELR 60S	265	170	108	82	62x1	30	69	-	-	94	-	M 8	M 8	35	194	8,5	4,1 kg	0,61 kg
ELR 80	285	170	117	102	80x1	40	88	10	30	121	M 6	M 10	M 10	45	194	8,5	5,3 kg	0,90 kg
ELR 80S	305	190	126	102	80x1	40	88	12,5	30	122	M 6	M 10	M 8	45	214	8,5	6,3 kg	0,90 kg
ELR 100	410	230	155	130	110x1	50	112	-	29	154	M 10	M 10	M 10	55	300	10,5	15,1 kg	1,50 kg
ELR 125	510	295	200	165	130x1	60	142	-	30	190	M 10	M 12	M 12	65	365	13	26,8 kg	2,05 kg

Choice of guide body profile:

0 **(0)** Standard **(1)** stainless guide rods **(2)** stainless guide rods and screws **(3)** stainless guide rods, rollers and screws

Choice of carriages:

0 **(0)**

(1)

Size	Version 1	
	Q	L
30	94	132
40	138	191
60	184	261
60S	214	284
80	210	301
80S	234	325
100	316	426
125	389	534

For standard carriage length see 'Q' in table. The carriages can be delivered in any non-standard length on request; the longer the carriage, the higher the load capacity.

Top and bottom carriages are rigidly joined, thus enabling higher loads to be applied. This increases the basic length by 12-24 mm. Thickness of jointing plate refer to chapter 1.2 page 6.

1500 Basic length + stroke = total length

ELR	40	0	0	0	0	0	0	0	01500
	Pos.	1	2	3	4	5	6	7	

For combination kits and connecting elements refer to accessory section

Sample ordering code:
ELR 40, non driven system, standard body profile, standard carriage, 1325 mm stroke

Modular Linear Actuator
ELRZ 30, 40, 60, 60S, 80, 80S, 100, 125

Roller Guide Unit Without Drive

Dimensions (mm)

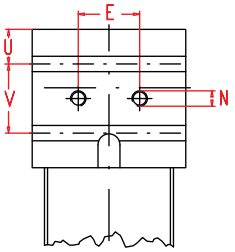

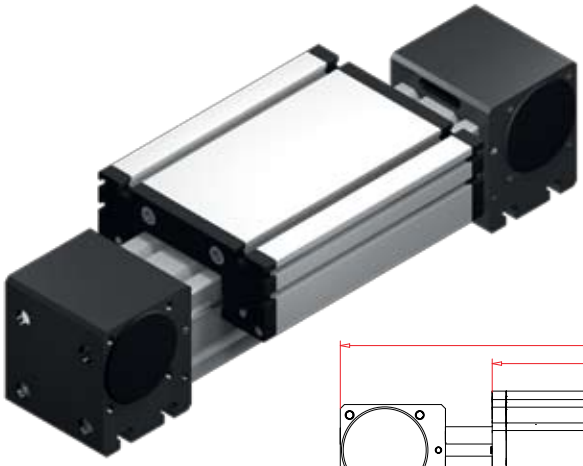

Increasing the carriage length will increase the basic length by the same amount.

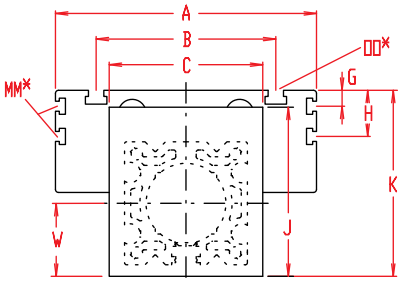

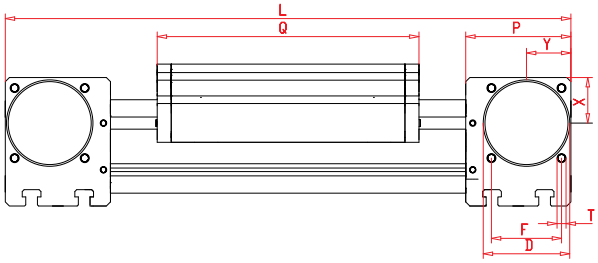

*For slide nuts refer to chapter 2.2 page 2

Size	Basic length L	A	B	C	D	E	F	G	H	J	K	MM for	N	OO for	P	Q	T	U	V	W	X	Y	Basic weight	Weight per 100 mm
ELRZ 30	158	70	56	42	28	13	25	-	-	44	47	-	M 6	M 6	36	82	M 4	-	-	21	16	16	0,6 kg	0,13 kg
ELRZ 40	225	100	66	58	37	18	32	-	-	58	64	-	M 6	M 6	49	122	M 5	12,5	24	29	20,5	20,5	1,2 kg	0,23 kg
ELRZ 60	290	144	96	80	47	30	42	-	-	82	90	-	M 8	M 8	59	168	M 6	14	30	41	27	27	3,4 kg	0,61 kg
ELRZ 60S	315	170	108	80	47	30	42	-	-	82	94	-	M 8	M 8	59	194	M 6	14	30	41	27	27	4,4 kg	0,61 kg
ELRZ 80	375	170	117	100	68	40	60	10	30	110	121	M 6	M 10	M 10	90	194	M 8	22,5	45	51	39	38	6,7 kg	0,90 kg
ELRZ 80S	395	190	126	100	68	40	60	12,5	30	110	122	M 6	M 10	M 8	90	214	M 8	22,5	45	51	39	38	7,7 kg	0,90 kg
ELRZ 100	530	230	155	130	90	50	80	-	29	135	154	M 10	M 12	M 10	110	300	M 10	23	64	65	50	50	17,5 kg	1,50 kg
ELRZ 125	625	295	200	160	110	60	100	-	30	167	191	M 10	M 12	M 12	130	365	M 12	38	50	82	60	60	28,3 kg	2,05 kg

Choice of guide body profile:

0 **(0)** Standard **(1)** stainless guide rods **(2)** stainless guide rods and screws **(3)** stainless guide rods, rollers and screws

Choice of carriages:

0 **(0)**

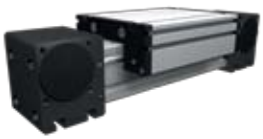

(1)

Size	Version 1	
	Q	L
30	94	170
40	138	241
60	184	306
60S	214	335
80	210	391
80S	234	415
100	316	546
125	389	649

For standard carriage length see 'Q' in table. The carriages can be delivered in any non-standard length on request; the longer the carriage, the higher the load capacity.

Top and bottom carriages are rigidly joined, thus enabling higher loads to be applied. This increases the basic length by 12-24 mm. Thickness of jointing plate refer to chapter 1.2 page 6.

Application:
This unit can be used as a load-carrying linear slide, or it may be fitted with a suitable pneumatic drive.

									1500
ELRZ	**40**	**0**	**0**	**0**	**0**	**0**	**0**	**0**	**01500**
	Pos. 1	2	3	4	5	6	7		

Basic Length + Stroke + Overtravel** = total length
**Minimum 25mm on each end

For combination kits and connecting elements refer to accessory section

Sample ordering code:
ELZR 40, Non driven system, standard body profile, standard carriage, 1275 mm stroke

Modular Linear Actuator
ER 30, 40, 60, 60S, 80, 80S, 100, 125

Roller Guide Unit Without Drive

Dimensions (mm)

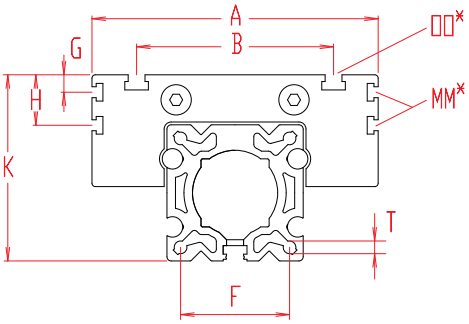

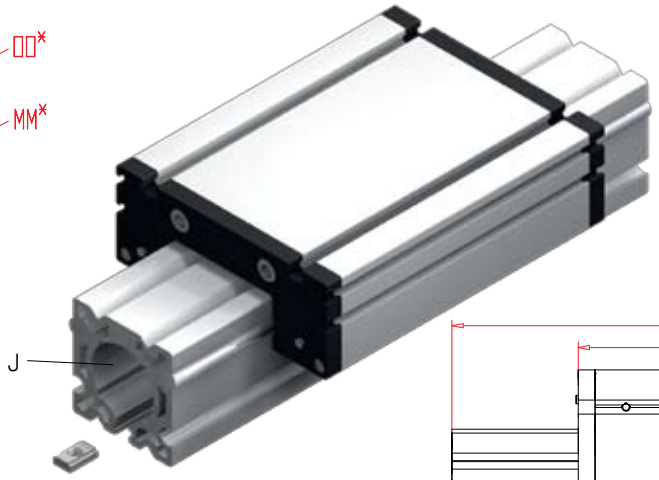

Increasing the carriage length will increase the basic length by the same amount.

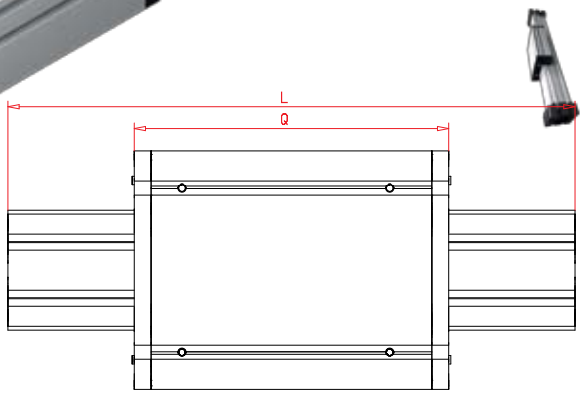

*For slide nuts refer to accessory section

Size	Basic length L	A	B	F	G	H	J	K	MM for	OO for	Q	T	Basic weight	Weight per 100 mm
ER 30	86	70	56	23	-	-	M 6	41	-	M 6	82	M 4	0,5 kg	0,12 kg
ER 40	126	100	66	29	-	-	M 6 - M10	55	-	M 6	122	M 5	0,7 kg	0,23 kg
ER 60	172	144	96	48	--	-	M 6 - M10	79	-	M 8	168	M 6	2,4 kg	0,61 kg
ER 60S	198	170	108	48	--	-	M 6 - M10	83	-	M 8	194	M 6	3,4 kg	0,61 kg
ER 80	198	170	117	64	10	30	M 6 - M10	110	M 6	M 10	194	M 8	3,7 kg	0,90 kg
ER 80S	218	190	126	64	12,5	30	M 6 - M10	111	M 6	M 8	214	M 8	4,7 kg	0,90 kg
ER 100	304	230	155	80	-	29	M 10	139	M 10	M 10	300	M 10	10,8 kg	1,50 kg
ER 125	369	295	200	100	-	30	M 12	170	M 10	M 12	365	M 12	20,3 kg	2,05 kg

Choice of guide body profile:

0 **(0)** Standard **(1)** stainless guide rods **(2)** stainless guide rods and screws **(3)** stainless guide rods, rollers and screws

Choice of carriages:

0 **(0)**

(1)

Size	Version 1	
	Q	L
30	94	98
40	138	142
60	184	188
60S	214	218
80	210	214
80S	234	238
100	316	320
125	389	393

For standard carriage length see 'Q' in table. The carriages can be delivered in any non-standard length on request; the longer the carriage, the higher the load capacity.

Top and bottom carriages are rigidly joined, thus enabling higher loads to be applied. This increases the basic length by 12-24 mm. Thickness of jointing plate refer to chapter 1.2 page 6.

Application:
This unit can be used as a load-carrying linear slide, or it may be fitted with a suitable pneumatic drive.

1500

Basic Length + Stroke + Overtravel** = total length
**Minimum 25mm on each end

ER	40	0	0	0	0	0	0	0	01500
	Pos.	1	2	3	4	5	6	7	

For combination kits and connecting elements refer to accessory section

Sample ordering code:
ER 40, Non driven system, standard body profile, standard carriage, 1374 mm stroke

Modular Linear Actuator
E 40, 60, 60S, 80, 80S

Roller guide unit without drive **Specifications**

Function:
Very low building system achieved by an aluminium guide body with integrated, hardened steel guide rods. The carriage, which has internal linear ball bearings that can be adjusted free of play, moves along the body.

Fitting position: As required, max. length 6.000 mm.
Carriage connection: By T-slots.
Unit mounting: By tapped holes in the mounting surface, bottom surface with T-slots.

Forces and torques

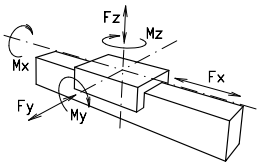

Size	E 40		E 60		E 60 S		E 80		E 80S	
Forces/Torques	static	dynamic	static	dynamic	static	dynamic	static	dynamic	static	dynamic
F_x (N)	-	-	-	-	-	-	-	-	-	-
F_y (N)	1200	700	3000	2000	4100	3100	3000	2000	4600	3600
F_z (N)	900	650	1700	1100	2160	1600	1700	1100	3000	1800
M_x (Nm)	25	20	67	43	88	65	90	55	170	140
M_y (Nm)	32	18	90	70	190	140	110	80	270	230
M_z (Nm)	35	25	120	100	230	170	150	120	300	220

All forces and torques relate to the following:

existing values / table values

$$\frac{Fy}{Fy_{dyn}} + \frac{Fz}{Fz_{dyn}} + \frac{Mx}{Mx_{dyn}} + \frac{My}{My_{dyn}} + \frac{Mz}{Mz_{dyn}} \leq 1$$

Speed					
max. (m/s)	4	5	**5**	6	8
Geometrical moments of inertia of aluminium profile					
I_x mm^4	0,157x10^5	1,71x10^5	1,71x10^5	2,8x10^5	2,8x10^5
I_y mm^4	0,654x10^5	6,1x10^5	6,1x10^5	10,59x10^5	10,59x10^5
E-Modulus N/mm^2	70000	70000	70000	70000	70000

Formula: E

$$f = \frac{F*L^3}{E*I*192}$$

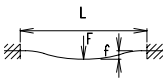

f = deflection (mm)
F = load (N)
L = free length (mm)
E = elastic modulus 70000 (N/mm^2)
I = second moment of area (mm^4)

nookindustries.com toll-free 1 (800) 321-7800
www.nookindustries.ru (499) 703 35 98 sell@nookindustries.ru

Modular Linear Actuator
E 40, 60, 60S, 80, 80S

Dimensions (mm)

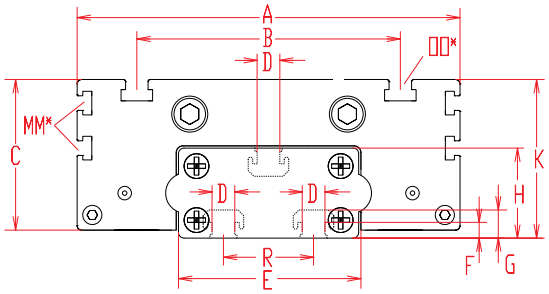

Increasing the carriage length will increase the basic length by the same amount.

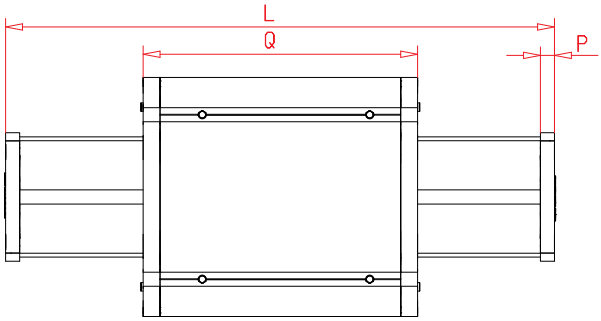

*For slide nuts refer to accessory section

Size	Basic length L	A	B	C	D	E	F	G	H	K	MM for	OO for	P	Q	R	Basic weight	Weight per 100 mm
E 40	136	100	66	34,5	10	40	7	12,5	22	37	-	M 6	6	122	-	1,0 kg	0,13 kg
E 60	186	144	96	48,0	10	60	7	12,5	30	49	-	M 8	8	168	-	2,2 kg	0,20 kg
E 60S	212	170	108	48,0	10	60	7	12,5	30	53	-	M 8	8	194	-	3,2 kg	0,20 kg
E 80	215	170	117	66,5	10	80	7	12,5	40	70	M 6	M 10	10	194	40	3,4 kg	0,48 kg
E 80S	245	190	126	67,5	10	80	7	12,5	40	71	M 6	M 8	10	214	40	4,4 kg	0,48 kg

Choice of guide body profile:

0 **(0)** Standard **(1)** stainless guide rods **(2)** stainless guide rods and screws **(3)** stainless guide rods, rollers and screws

1500 Basic Length + Stroke + Overtravel** = total length
**Minimum 25mm on each end

E	40	0	0	0	0	0	0	0	01500
	Pos.	1	2	3	4	5	6	7	

For combination kits and connecting elements refer to accessory section

Sample ordering code:
E 40, non driven system, standard body profile, 1364 mm stroke

Modular Linear Actuator
UL 40, 60, 80

Roller guide unit without drive

Specifications

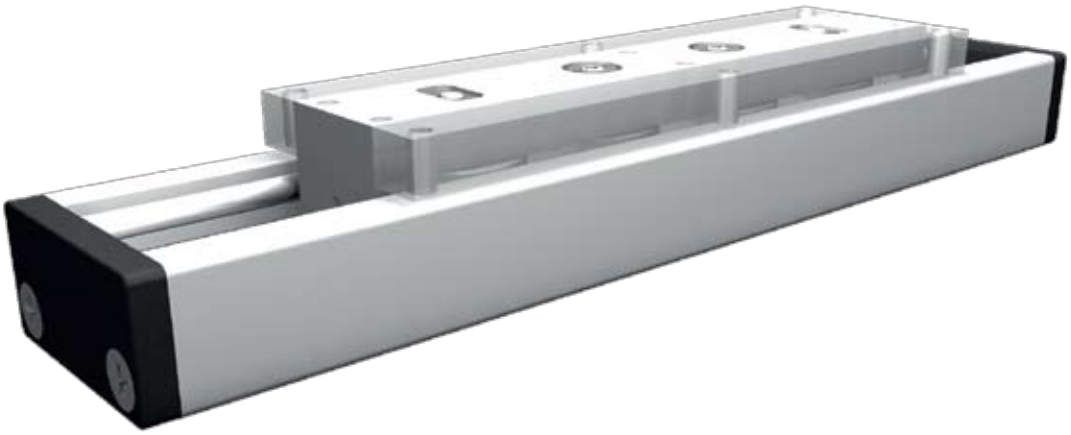

Function:
Very low building roller system achieved by an aluminium guide body with integrated, hardened steel guide rods. The carriage, which has internal linear ball bearings that can be adjusted free of play, moves along the body.

Fitting position: As required, max. length 6.000 mm.
Carriage connection: By tapped holes
Unit mounting: Afterwards by holes or tapped holes

Forces and torques

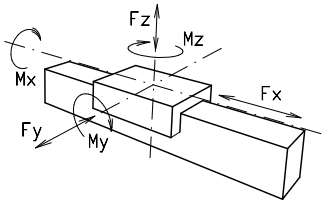

Size	UL 40		UL 60		UL 80	
Forces/Torques	static	dynamic	static	dynamic	static	dynamic
F_x (N)	-	-	-	-	-	-
F_y (N)	1200	700	3000	2000	3000	2000
F_z (N)	900	650	1700	1100	1700	1100
M_x (Nm)	25	20	67	43	90	55
M_y (Nm)	32	18	90	70	110	80
M_z (Nm)	35	25	120	100	150	120

All forces and torques relate to the following:

existing values / table values

$$\frac{Fy}{Fy_{dyn}} + \frac{Fz}{Fz_{dyn}} + \frac{Mx}{Mx_{dyn}} + \frac{My}{My_{dyn}} + \frac{Mz}{Mz_{dyn}} \leq 1$$

Speed			
max. (m/s)	4	5	6
Geometrical moments of inertia of aluminium profile			
I_x mm^4	$0{,}157 \times 10^5$	$1{,}71 \times 10^5$	$2{,}8 \times 10^5$
I_y mm^4	$0{,}654 \times 10^5$	$6{,}1 \times 10^5$	$10{,}59 \times 10^5$
E-Modulus N/mm²	70000	70000	70000

Formula: UL

$$f = \frac{F \cdot L^3}{E \cdot I \cdot 192}$$

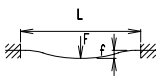

f = deflection (mm)
F = load (N)
L = free length (mm)
E = elastic modulus 70000 (N/mm²)
I = second moment of area (mm⁴)

nookindustries.com toll-free 1 (800) 321-7800
www.nookindustries.ru (499) 703 35 98 sell@nookindustries.ru

Modular Linear Actuator
UL 40, 60, 80

Dimensions (mm)

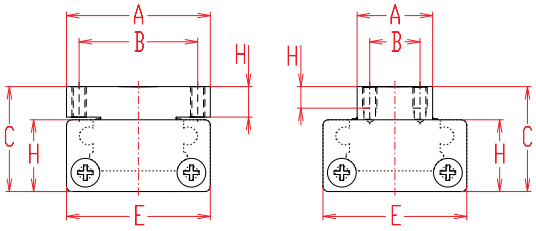

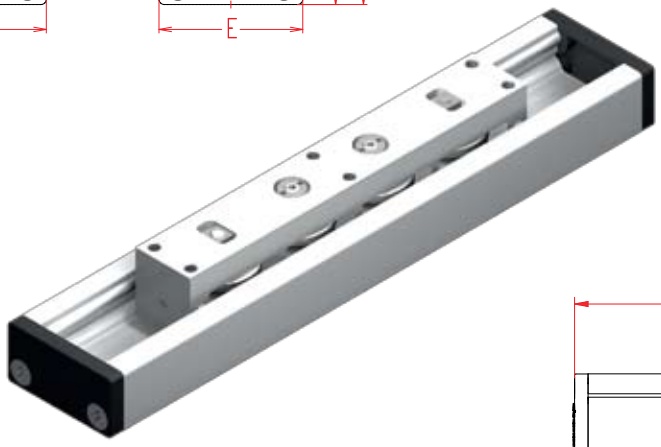

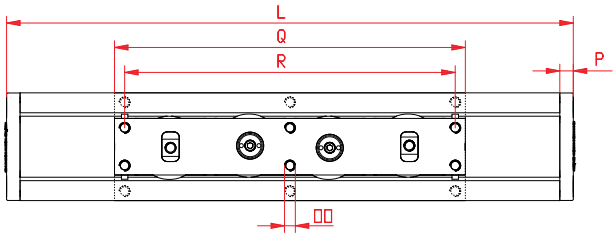

Size	Basic length L	A	B	C	E	H	OO for	P	Q	R	S	T	Basic weight	Weight per 100 mm
UL 40	160	40/20	31/13	33	40	22	M 5/M 5x8	6	146*	120	6,8	7,3	1,2 kg	0,13 kg
UL 60	215	60/29	48/20	43	60	30	M 6/M 6x10	8	194*	180	7,5	11	2,1 kg	0,20 kg
UL 80	285	80/42	66/28	58,5	80	40	M 8/M 8x12	10	260*	245	11,5	14,8	4,2 kg	0,48 kg

* = the carriage is not available in different lengths

Choice of guide body profile:

0 **(0)** Standard **(1)** stainless guide rods **(2)** stainless guide rods and screws **(3)** stainless guide rods, rollers and screws

0 **Choice of carriage:**

(0) Standard

(1) small carriage

1500 Basic Length + Stroke + Overtravel** = total length

**Minimum 25mm on each end

UL	40	0	0	0	0	0	0	0	01500
	Pos.	1	2	3	4	5	6	7	

For combination kits and connecting elements refer to accessory section

Sample ordering code:
UL 40, non driven system, standard body profile, standard carriage (wide version), 1340 mm stroke

Possible Mounting Styles

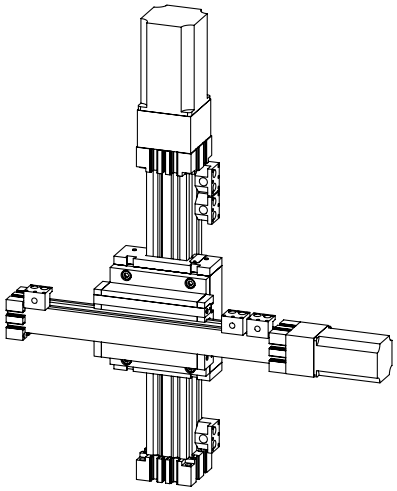

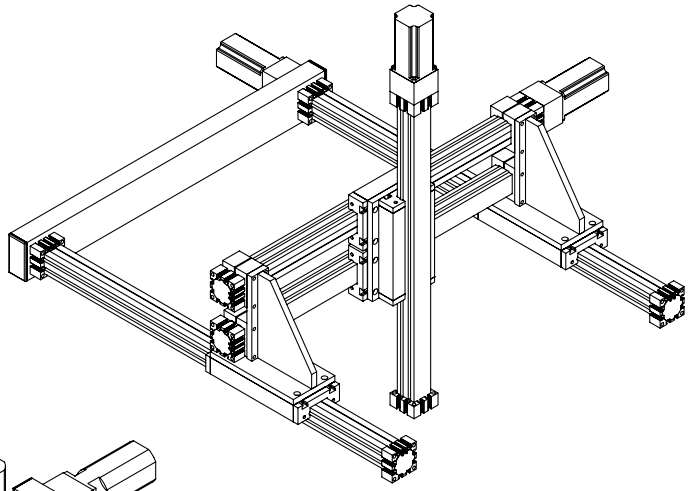

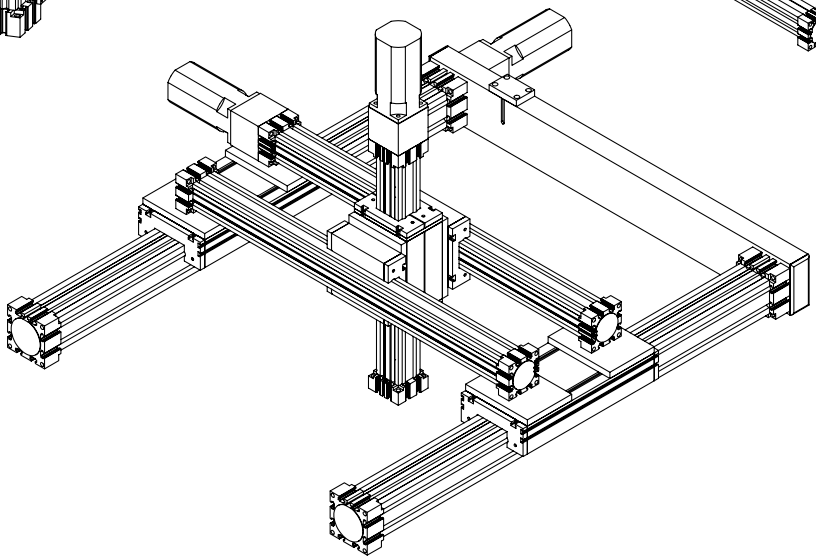

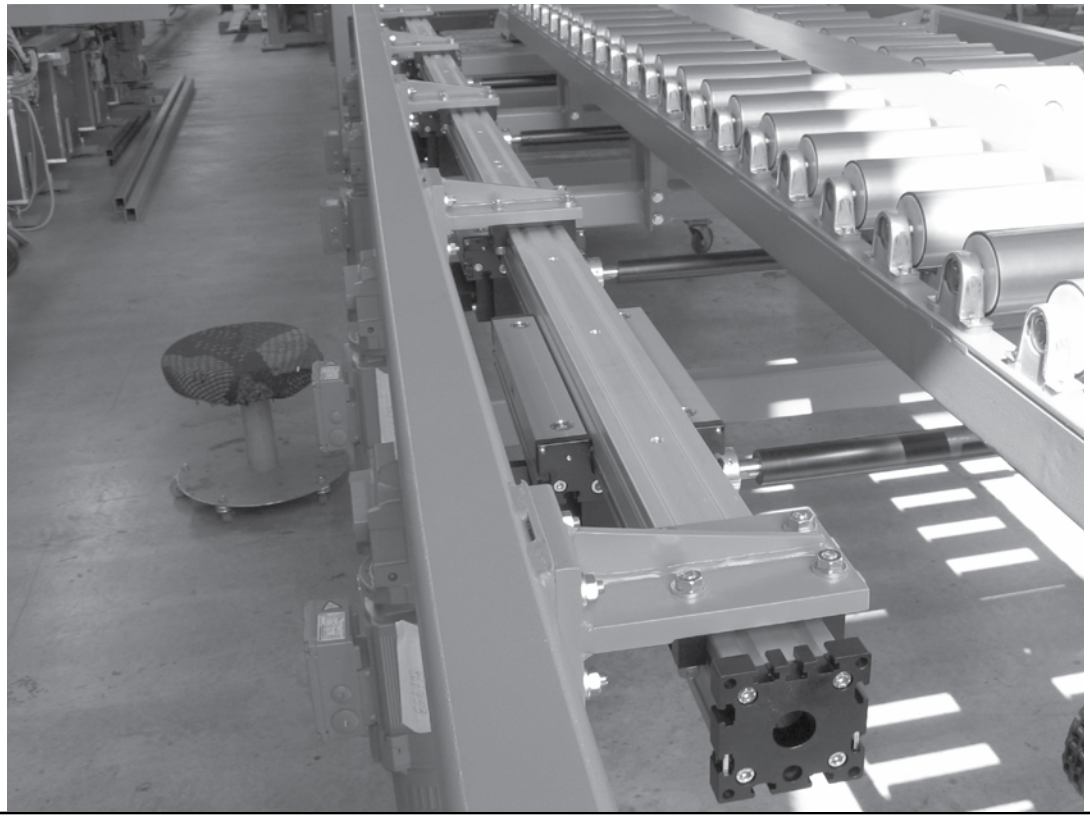

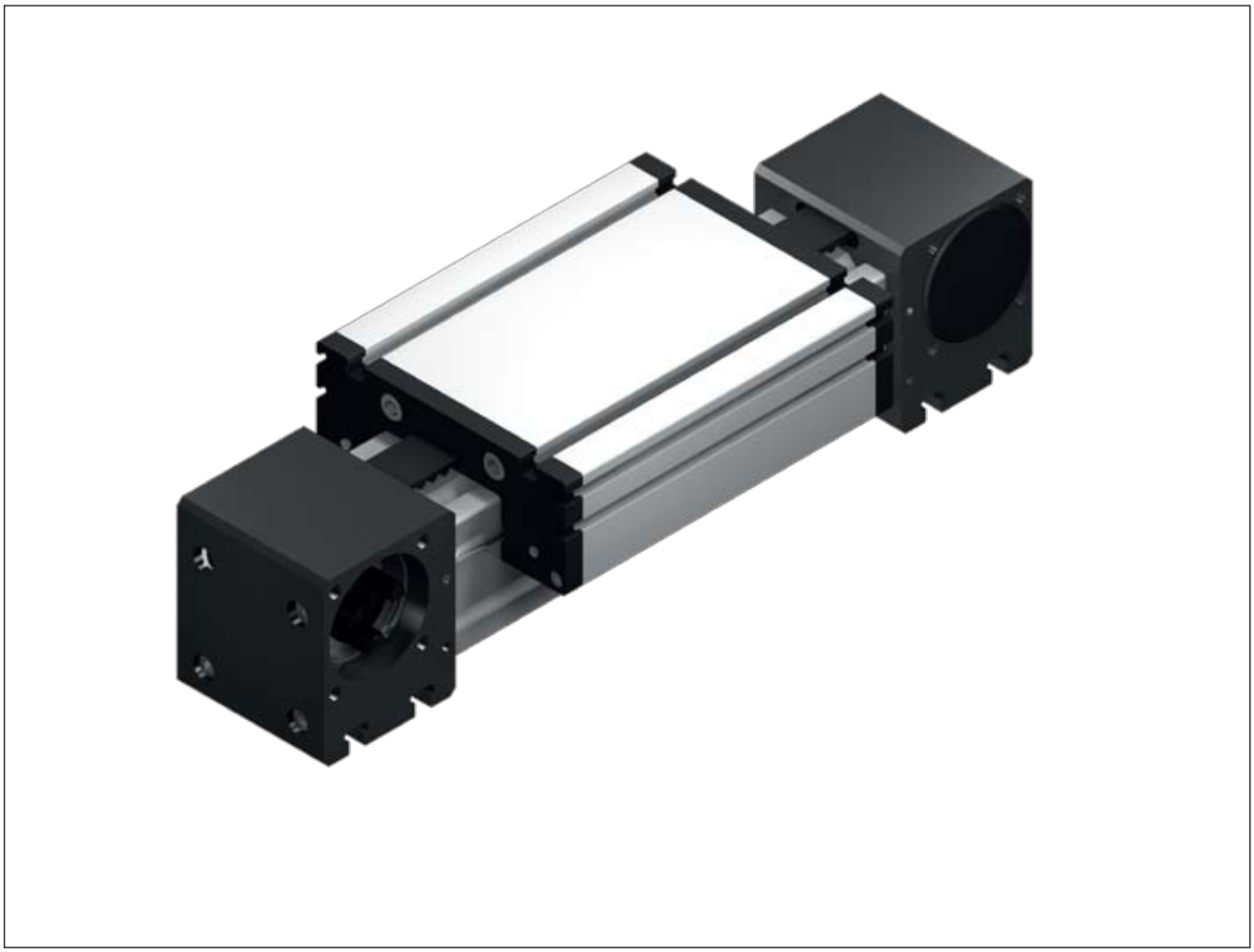

Belt Driven Modular Linear Actuators ELZ, ELZex, ELZG, ELZZ, ELSZ, ELSD, ELZT, ELHZ, ELVZ, ELFZ, ELZU, MLZ

Modular Linear Actuator
ELZ 30, 40, 60, 60S, 80, 80S, 100, 125

Belt Drive **Specifications**

3.1

Function:
This linear unit consists of an aluminium square profile with integrated, hardened steel guide rods. The carriage, which has internal linear ball bearings that can be adjusted free of play, is driven along the guide rods by a timing belt. The pulleys have maintenance-free ball bearings. Belt tension can be readjusted by a simple screw adjustment device in the carriage. This device can also be used for symmetrical adjustment of two or more linear units running parallel.

Forces and torques

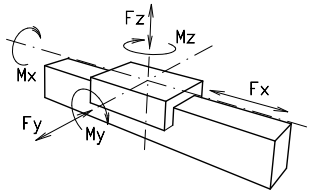

Fitting position: As required. Max. length 6.000 mm without joints.
Carriage mounting: By T-slots.
Unit mounting: By T-slots or tapped holes in the bearing block, mounting sets.
Belt type: HTD with steel reinforcement, no backlash when changing direction, repeatability: ± 0,1 mm.

Size	ELZ 30		ELZ 40		ELZ 60		ELZ 60 S		ELZ 80		ELZ 80 S		ELZ 100		ELZ 125	
Forces/Torques	static	dyna-mic	static	dyna-mic	static	dyna-mic	static	dynamic	static	dyna-mic	static	dyna-mic	static	dynamic	static	dynamic
F_x (N)	200	180	390	350	894	800	894	800	1900	1800	1900	1800	4000	3800	5900	5750
F_y (N)	90	60	1200	700	3000	2000	4100	3100	3000	2000	4600	3600	8000	6500	12000	9000
F_z (N)	90	60	900	650	1700	1100	2160	1600	1700	1100	3000	1800	3600	2200	6000	4500
M_x (Nm)	10	5	25	20	67	43	88	65	90	55	170	140	300	230	600	450
M_y (Nm)	13	6	32	18	90	70	190	140	110	80	270	230	400	270	750	600
M_z (Nm)	14	7	35	25	120	100	230	170	150	120	300	220	750	500	1350	1150
All forces and torques relate to the following: existing values / table values $\frac{Fy}{Fy_{dyn}} + \frac{Fz}{Fz_{dyn}} + \frac{Mx}{Mx_{dyn}} + \frac{My}{My_{dyn}} + \frac{Mz}{Mz_{dyn}} \leq 1$																
No-load torque																
Nm	0,2		0,3		0,6		0,7		0,9		1,2		1,4		1,8	
Speed																
(m/sec) max	2		4		5		7		6		8		10		10	
Tensile force																
permanent (N)	200		390		900		900		1900		1900		4000		5900	
0,2 sec (N)	280		480		1000		1000		2090		2090		4300		6350	
Geometrical moments of inertia of aluminium profile																
I_x mm^4	$4{,}09 \times 10^4$		$1{,}32 \times 10^5$		$6{,}79 \times 10^5$		$6{,}79 \times 10^5$		$18{,}99 \times 10^5$		$18{,}99 \times 10^5$		$44{,}4 \times 10^5$		$101{,}5 \times 10^5$	
I_y mm^4	$4{,}00 \times 10^4$		$1{,}34 \times 10^5$		$6{,}97 \times 10^5$		$6{,}97 \times 10^5$		$18{,}97 \times 10^5$		$18{,}97 \times 10^5$		$44{,}8 \times 10^5$		$101{,}5 \times 10^5$	
E-Modulus N/mm^2	70000		70000		70000		70000		70000		70000		70000		70000	

Formula: ELZ
Driving torque:

$$M_a = \frac{F*P*S_i}{2000*\pi} + M_{leer}$$

$$P_a = \frac{M_a*n}{9550}$$

F = force (N)
P = pulley action perimeter (mm)
S_i = safety factor 1,2 ... 2
M_{leer} = no-load torque (Nm)
n = rpm pulley (min^{-1})
M_a = driving torque (Nm)
P_a = motor power (KW)

$$f = \frac{F*L^3}{E*I*192}$$

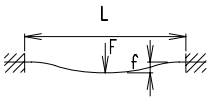

f = deflection (mm)
F = load (N)
L = free length (mm)
E = elastic modulus 70000 (N/mm^2)
I = second moment of area (mm^4)

Modular Linear Actuator

ELZ 30, 40, 60, 60S, 80, 80S, 100, 125

Dimensions (mm)

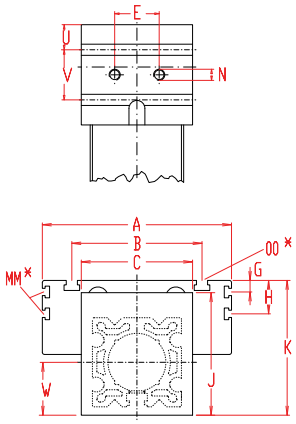

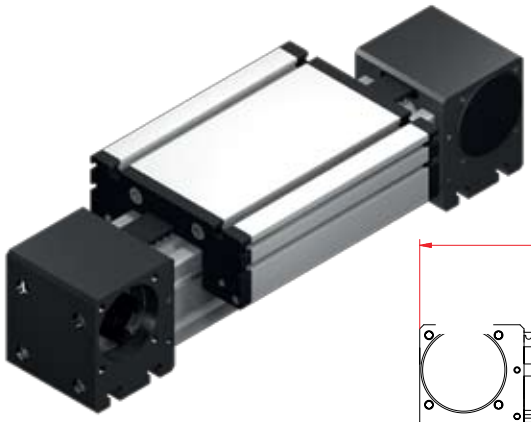

Increasing the carriage length will increase the basic length by the same amount.

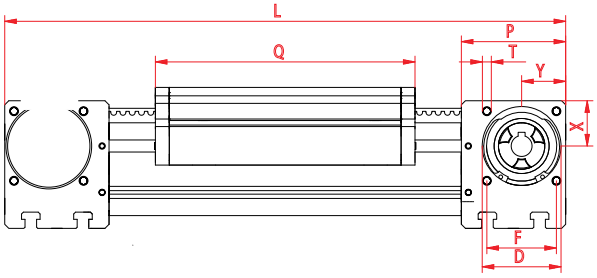

*For slide nuts refer to chapter 2.2 page 2

Size	Basic length L	A	B	C	D	E	F	G	H	J	K	MM for	N	OO for	P	Q	T	U	V	W	X	Y	Basic weight	Weight per 100 mm
ELZ 30	158	70	56	42	28	13	25	-	-	44	47	-	M 5	M 6	36	82	M 4	-	-	21	16	16	0,8 kg	0,13 kg
ELZ 40	225	100	66	58	37	18	32	-	-	58	64	-	M 6	M 6	49	122	M 5	12,5	24	29	20,5	20,5	1,9 kg	0,24 kg
ELZ 60	290	144	96	80	47	30	42	-	-	82	90	-	M 8	M 8	59	168	M 6	15	30	41	27	26	4,8 kg	0,62 kg
ELZ 60 S	315	170	108	80	47	30	42	-	-	82	94	-	M 8	M 8	59	194	M 6	15	30	41	27	26	5,8 kg	0,62 kg
ELZ 80	375	170	117	100	68	40	60	10	30	110	121	M 6	M 10	M 10	90	194	M 8	22,5	45	51	39	38	10,0 kg	1,00 kg
ELZ 80 S	395	190	126	100	68	40	60	12,5	30	110	122	M 6	M 10	M 8	90	214	M 8	22,5	45	51	39	38	11,0 kg	1,00 kg
ELZ 100	530	230	155	130	90	50	80	-	29	135	154	M 10	M 12	M 10	110	300	M 10	23	64	65	50	50	24,0 kg	1,60 kg
ELZ 125	625	295	200	160	110	60	100	-	30	167	191	M 10	M 12	M 12	130	365	M 10	38	50	82	60	60	37,0 kg	2,10 kg

0 **Choice of guide body profile:**
(0) Standard **(1)** stainless guide rods **(2)** stainless guide rods and screws **(3)** stainless guide rods, rollers and screws

Choice of carriages:

0 **(0)**

(1)

Size	Version 1	
	Q	L
30	94	170
40	138	241
60	184	306
60S	314	335
80	210	391
80S	234	415
100	316	546
125	389	649

Coupling - shaft mounting:

0

0

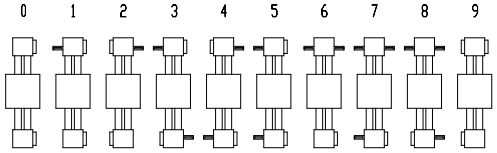

Version 9 is the same as 0, but with double sided coupling claw.

The standard version is supplied without shaft. A shaft can be retrofitted by inserting it into the pulley bore and securing it with 2 locking rings or tension sets (size 100 and 125).

Belt table

Code No.		Size	Belt	mm/rev.	Number of teeth
0	**1**	30	3M12	75	25
0	**3**	40	5M15	100	20
0	**4**	60 (S)	5M25	130	26
0	**7**	80 (S)	8M30	192	24
0	**9**	100	8M50	256	32
1	**0**	125	8M70	304	38

Basic Length + Stroke + Overtravel** = total length
**Minimum 25mm on each end

ELZ	40	1	0	0	0	0	3	1	01500
	Pos.	1	2	3	4	5	6	7	

Shaft dimensions

Size	Shaft ø h6 x length	Key
30	6 x 15	2x2x12
40	10 x 27	3x3x25
60 (S)	14 x 35	5x5x28
80 (S)	18 x 45	6x6x40
100	22 x 45	6x6x40
125	30 x 55	8x7x40

Sample ordering code:
ELZ 40 with standard body profile, standard carriage, coupling claw on one side, 1275 mm stroke.

Modular Linear Actuator "Explosion Proof"

ELZ Ex 40, 60, 60S, 80, 80S, 100, 125

Belt Drive **Specifications**

ATEX 95
Ex II 2G EEx c II B T4
Ex II 3D EEx c T1 25 ° C

3.1

Function:
Like ELZ. The Modular Linear Actuator is suitable for use according to the intended purpose in potentially explosive areas (see ATEX 95 marking). An operating manual is included in the scope of delivery. The system is certified for the following areas:
ATEX 95 II 2G EEx c IIB T4:
All application areas except for underground mining. Gas atmosphere category 2, explosion protection category: protection due to secure construction (design security). Equipment group IIB. Temperature class T4=135°C
ATEX 95 II 3D T125°C:
All application areas except for underground mining. Dust atmosphere category 3. Maximum permissible surface temperature: 125°C.

Forces and torques

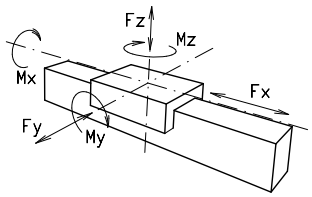

Fitting position: As required, max. length without joints = 6,000 mm.
Carriage mounting: T-slots
Unit mounting: By T-slots or tapped holes in the bearing block, mounting sets.
Belt type: HTD with steel reinforcement, no backlash when changing direction, repeatability: ± 0,1 mm.

Size	ELZex 40		ELZex 60		ELZex 60 S		ELZex 80		ELZex 80 S		ELZex 100		ELZex 125	
Forces/Torques	static	dynamic	static	dynamic	statisch	dynamic	static	dynamic	static	dynamic	static	dynamic	static	dynamic
F_x (N)	178	142	312	250	312	250	1083	866	1083	866	1127	902	2067	1654
F_y (N)	517	414	1330	1064	1910	1528	1584	1267	2219	1775	3100	2480	4980	3984
F_z (N)	355	284	742	594	935	748	613	490	1052	842	1292	1034	2190	1752
M_x (Nm)	12	10	36	29	52	41	36	29	67	54	101	81	220	176
M_y (Nm)	13	11	39	32	66	53	39	32	87	70	136	109	280	224
M_z (Nm)	19	15	70	56	137	110	100	81	182	146	326	260	636	509
All forces and torques relate to the following														
existing values / table values	$\frac{Fy}{Fy_{dyn}} + \frac{Fz}{Fz_{dyn}} + \frac{Mx}{Mx_{dyn}} + \frac{My}{My_{dyn}} + \frac{Mz}{Mz_{dyn}} \leq 1$													
No-load torque														
Nm	0,3		0,6		0,7		0,9		1,2		1,4		1,8	
Speed														
(m/sec) max	1		1		1		1		1		1		1	
Tensile force														
permanent (N)	178		312		312		1083		1083		1127		2067	
Geometrical moments of inertia of aluminium profile														
I_x mm^4	$1{,}32 \times 10^5$		$6{,}79 \times 10^5$		$6{,}79 \times 10^5$		$18{,}99 \times 10^5$		$18{,}99 \times 10^5$		$44{,}4 \times 10^5$		$101{,}5 \times 10^5$	
I_y mm^4	$1{,}34 \times 10^5$		$6{,}97 \times 10^5$		$6{,}97 \times 10^5$		$18{,}97 \times 10^5$		$18{,}97 \times 10^5$		$44{,}8 \times 10^5$		$101{,}5 \times 10^5$	
E-Modulus N/mm^2	70000		70000		70000		70000		70000		70000		70000	

Formula: ELZex

Driving torque:

$$M_a = \frac{F*P*S_i}{2000*\pi} + M_{leer}$$

$$P_a = \frac{M_a*n}{9550}$$

F = force (N)
P = pulley action perimeter (mm)
S_i = safety factor 1,2 ... 2
M_{leer} = no-load torque (Nm)
n = rpm pulley (min^{-1})
M_a = driving torque (Nm)
P_a = motor power (KW)

$$f = \frac{F*L^3}{E*I*192}$$

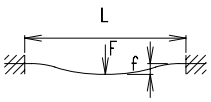

f = deflection (mm)
F = load (N)
L = free length (mm)
E = elastic modulus 70000 (N/mm^2)
I = second moment of area (mm^4)

Modular Linear Actuator "Explosion Proof"

ELZ Ex 40, 60, 60S, 80, 80S, 100, 125

Dimensions (mm)

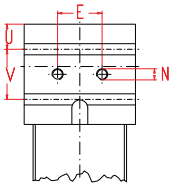

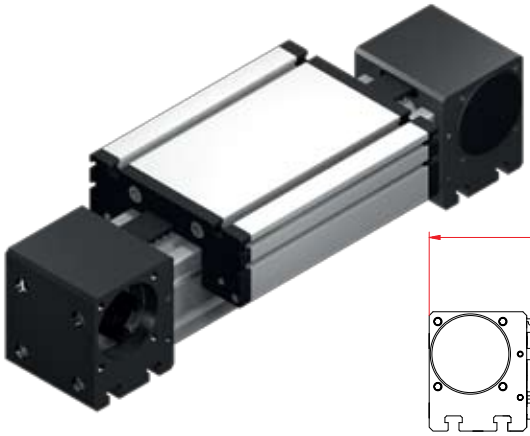

ATEX 95

Ex II 2G EEx c II B T4

Ex II 3D EEx c T1 25 ° C

Increasing the carriage length will increase the basic length by the same amount.

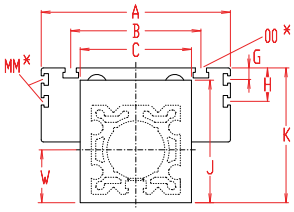

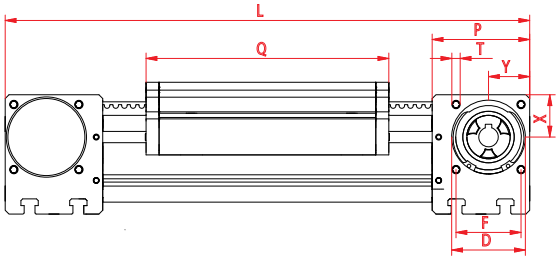

*For slide nuts refer to chapter 2.2 page 2

3.1

Size	Basic length L	A	B	C	D	E	F	G	H	J	K	MM for	N	OO for	P	Q	T	U	V	W	X	Y	Basic weight	Weight per 100 mm
ELZex 40	225	100	66	58	37	18	32	-	-	58	64	-	M 6	M 6	49	122	M 5	12,5	24	29	20,5	20,5	1,9 kg	0,24 kg
ELZex 60	290	144	96	80	47	30	42	-	-	82	90	-	M 8	M 8	59	168	M 6	15	30	41	27	26	4,8 kg	0,62 kg
ELZex 60 S	315	144	108	80	47	30	42	-	-	82	94	-	M 8	M 8	59	194	M 6	15	30	41	27	26	4,8 kg	0,62 kg
ELZex 80	375	170	117	100	68	40	60	10	30	110	121	M 6	M 10	M 10	90	194	M 8	22,5	45	51	39	38	10,0 kg	1,00 kg
ELZex 80 S	395	190	126	100	68	40	60	12,5	30	110	122	M 6	M 10	M 8	90	214	M 8	22,5	45	51	39	38	11,0 kg	1,00 kg
ELZex 100	530	230	155	130	90	50	80	-	29	135	154	M 10	M 12	M 10	110	300	M 10	23	64	65	50	50	24,0 kg	1,60 kg
ELZex 125	625	295	200	160	110	60	100	-	30	167	191	M 10	M 12	M 12	130	365	M 10	38	50	82	60	60	37,0 kg	2,10 kg

Choice of guide body profile:

0 **(0)** Standard **(1)** stainless guide rods **(2)** stainless guide rods and screws **(3)** stainless guide rods, screws and rollers

Choice of carriages:

0 **(0)**

(1)

Size	Version 1	
	Q	L
40	138	241
60	184	306
60S	314	335
80	210	391
80S	234	415
100	316	546
125	389	649

Coupling - shaft mounting:

0

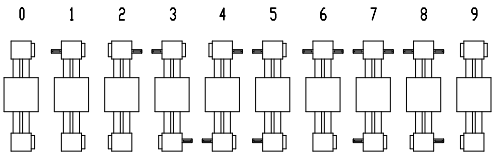

Version 8 is the same as 0, but with double sided coupling claw.

The standard version is supplied without shaft. A shaft can be retrofitted by inserting it into the pulley bore and securing it with 2 locking rings or tension sets (size 100 and 125).

Belt table

Code No.		Size	Belt	mm/rev.	Number of teeth
0	**3**	40	5M15	100	20
0	**4**	60 (S)	5M25	130	26
0	**7**	80 (S)	8M30	192	24
0	**9**	100	8M50	256	32
1	**0**	125	8M70	304	38

Shaft dimensions

Size	Shaft ø h6 x length	Key
40	10 x 27	3x3x25
60 (S)	14 x 35	5x5x28
80 (S)	18 x 45	6x6x40
100	22 x 45	6x6x40
125	30 x 55	8x7x40

Basic Length + Stroke + Overtravel** = total length
**Minimum 25mm on each end

ELZex	40	1	0	0	0	0	3	1	01500
	Pos.	1	2	3	4	5	6	7	

For combination kits and connecting elements refer to chapter 2.2

Sample ordering code:
ELZex 40, standard body profile, standard carriage, coupling claw on one side, 1275 mm stroke.

Modular Linear Actuator
ELZ 30, 40, 60, 60S, 80, 80S, 100, 125

Belt Drive with Two Carriages Moving In Opposite Directions

Dimensions (mm)

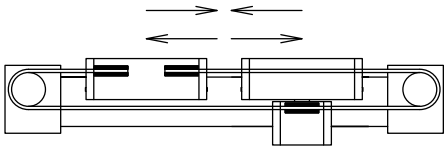

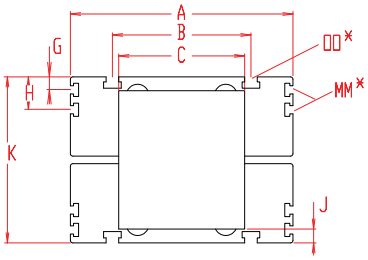

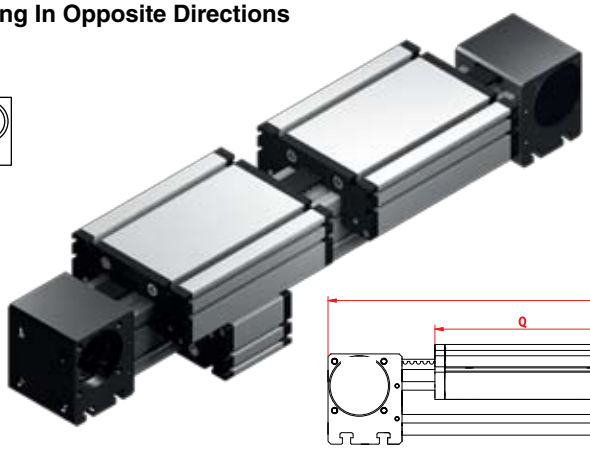

Increasing the carriage length will increase the basic length by the same amount.

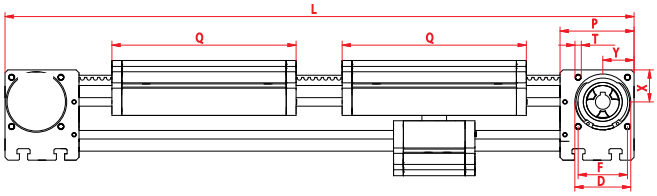

*For slide nuts refer to chapter 2.2 page 2

Size	Basic length L	A	B	C	D	F	G	H	J	K	MM for	OO for	P	Q	T	X	Y	Basic weight	Weight per 100 mm
ELZ 30	250	70	56	42	28	25	-	-	5	52	-	M 6	36	82	M 4	16	16	1,2 kg	0,13 kg
ELZ 40	350	100	66	58	37	32	-	-	6	70	-	M 6	49	122	M 5	20,5	20,5	2,8 kg	0,24 kg
ELZ 60	460	144	96	80	47	42	-	-	8	98	-	M 8	59	168	M 6	27	27	7,4 kg	0,62 kg
ELZ 60S	510	170	108	80	47	42	-	-	12	106	-	M 8	59	194	M 6	27	27	7,4 kg	0,62 kg
ELZ 80	570	170	117	100	68	60	10	30	19	140	M 6	M10	90	194	M 8	39	39	15,0 kg	1,00 kg
ELZ 80S	610	190	126	100	68	60	12,5	30	21	142	M 6	M 8	90	214	M 8	39	39	17,0 kg	1,00 kg
ELZ 100	830	230	155	130	90	80	-	29	24	178	M10	M10	110	300	M10	50	50	34,0 kg	1,60 kg
ELZ 125	990	295	200	160	110	100	-	30	25,5	216	M10	M12	130	365	M10	60	60	53,5 kg	2,10 kg

Choice of guide body profile:

0 **(0)** Standard **(1)** stainless guide rods **(2)** stainless guide rods and screws

Choice of carriages:

0 **(0)**

(1)

Size	Version 1	
	Q	L
30	94	274
40	138	382
60	184	492
60S	314	554
80	210	602
80S	234	650
100	316	862
125	389	1038

Coupling - shaft mounting:

0

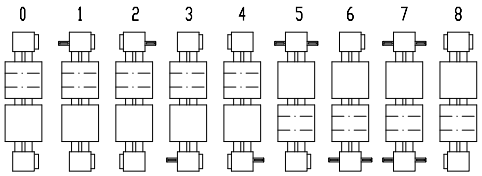

Version 8 is the same as 0, but with double sided coupling claw.

The standard version is supplied without shaft. A shaft can be retrofitted by inserting it into the pulley bore and securing it with 2 locking rings or tension sets (size 100 and 125).

Belt table

Code No.		Size	Belt	mm/rev.	Number of teeth
0	1	30	3M12	75	25
0	3	40	5M15	100	20
0	4	60 (S)	5M25	130	26
0	7	80 (S)	8M30	192	24
0	9	100	8M50	256	32
1	0	125	8M70	304	38

Shaft dimensions

Size	Shaft ø h6 x length	Key
30	6 x 15	2x2x12
40	10 x 27	3x3x25
60 (S)	14 x 35	5x5x28
80 (S)	18 x 45	6x6x40
100	22 x 45	6x6x40
125	30 x 55	8x7x40

ELZ	40	3	0	0	0	0	3	1	01500
	Pos.	1	2	3	4	5	6	7	

Basic Length + Stroke + Overtravel** = total length
**Minimum 25mm on each end

For combination kits and connecting elements refer to chapter 2.2

Sample ordering code:
ELZ 40, right/left hand with standard body profile, standard carriage, coupling claw on one side, 1150 mm stroke.

Modular Linear Actuator
ELZG 30, 40, 60, 60S, 80, 80S

Belt Drive

Dimensions (mm)

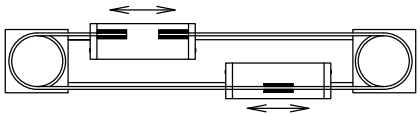

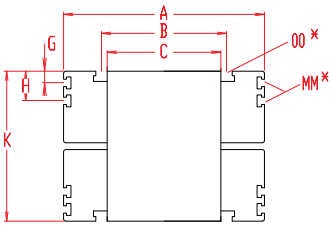

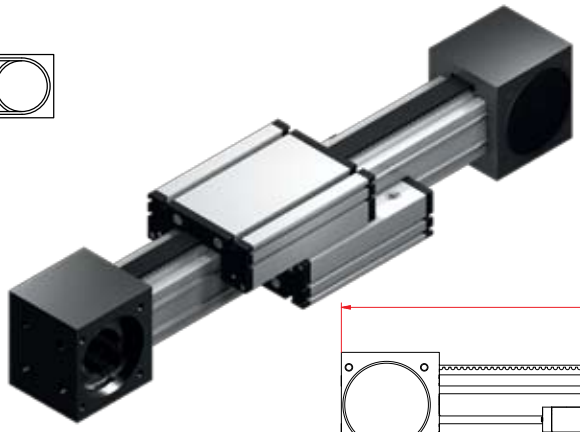

Increasing the carriage length will increase the basic length by the same amount.

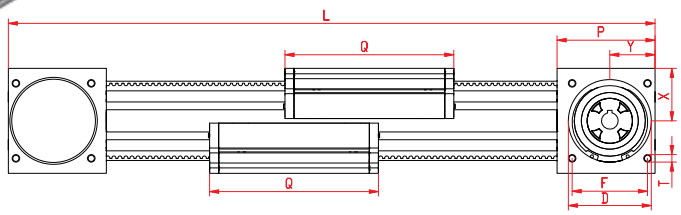

*For slide nuts refer to chapter 2.2 page 2

Size	Basic length L	A	B	C	D	F	G	H	K	MM for	OO for	P	Q	T	X	Y	Basic weight	Weight per 100 mm
ELZG 30	195	70	56	48	47	42	-	-	52	-	M 6	55	82	M 6	26	27	1,1 kg	0,13 kg
ELZG 40	265	100	66	60	55	55	-	-	70	-	M 6	70	124	M 6	35	33	4,0 kg	0,29 kg
ELZG 60	365	144	96	88	80	70	-	-	98	-	M 8	95	168	M 8	49	46	10,3 kg	0,65 kg
ELZG 60S	390	170	108	88	80	70	-	-	98	-	M 8	95	194	M 8	49	46		
ELZG 80	460	170	117	118	110	100	10	30	140	M 6	M 10	130	194	M 10	70	60	23,5 kg	1,15 kg
ELZG 80S	480	190	126	118	110	100	12,5	30	142	M 6	M 8	130	214	M 10	70	60	24,5 kg	1,15 kg

0

Choice of guide body profile:
(0) Standard **(1)** stainless guide rods **(2)** stainless guide rods and screws **(3)** stainless guide rods, rollers and screws

Choice of carriages:

0

(0)

For standard carriage length see 'Q' in table. The carriages can be delivered in any non-standard length upon request; the longer the carriage, the higher the load capacity.

Coupling - shaft mounting:

0

0

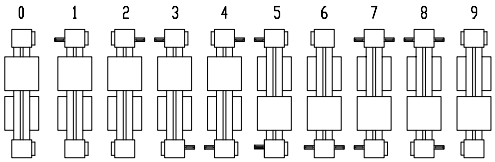

Version 9 is the same as 0, but with double sided coupling claw.

The standard version is supplied without shaft. A shaft can be retrofitted by inserting it into the pulley bore and securing it with 2 locking rings or tension sets (size 80).

Belt table

Code No.		Size	Belt	mm/rev.	Number of teeth
0	1	30	3M12	120	40
0	3	40	5M15	160	32
0	4	60 (S)	5M25	220	44
0	7	80 (S)	8M30	320	40

Shaft dimensions

Size	Shaft Ø h6 x length	Key
30	6 x 15	2x2x12
40	14 x 35	5x5x28
60 (S)	18 x 45	6x6x40
80 (S)	22 x 45	6x6x40

Basic Length + Stroke + Overtravel** = total length
**Minimum 25mm on each end

ELZG	40	1	0	0	0	0	3	1	01500
	Pos.	1	2	3	4	5	6	7	

For combination kits and connecting elements refer to chapter 2.2

Sample ordering code:
ELZG 40, standard body profile, standard carriage and coupling claw on one side, 1235 mm stroke.

Modular Linear Actuator
ELZZ 60, 60S, 80, 80S, 100, 125

Belt Drive with Two Separately Driven Carriages **Specifications**

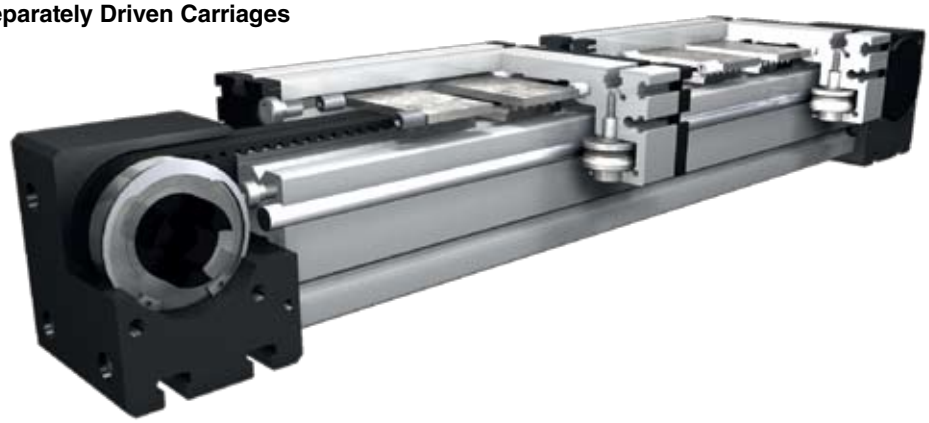

Function:
Same functions as ELZ, but each carriage can be moved separately by its own drive. This unit has twin pulleys, which run on separate bearings, and two independent, parallel drive belts, one for each carriage.

Fitting position: As required. Max. length 4.000 mm without joints.
Carriage mounting: By T-slots.
Unit mounting: By T-slots or tapped holes in the bearing block, mounting sets.
Belt type: HTD with steel reinforcement, no backlash when changing direction, repeatability ± 0,1 mm.

Forces and torques

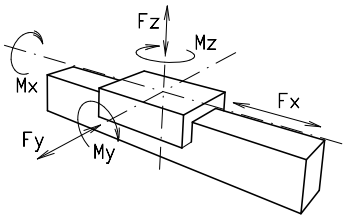

Size	ELZZ 60		ELZZ 60 S		ELZZ 80		ELZZ 80 S		ELZZ 100		ELZZ 125	
Forces/Torques	static	dyna-mic	static	dynamic	static	dyna-mic	static	dyna-mic	static	dyna-mic	static	dyna-mic
F_x (N)	298	250	298	250	679	500	679	500	1210	1100	1900	1800
F_y (N)	3000	2000	4100	3100	3000	2000	4600	3600	8000	6500	12000	9000
F_z (N)	1700	1100	2160	1600	1700	1100	3000	2600	3600	2200	6000	4500
M_x (Nm)	67	43	88	65	90	55	170	140	300	230	600	450
M_y (Nm)	90	70	190	140	110	80	270	230	400	270	750	600
M_z (Nm)	120	100	230	170	150	120	300	220	750	500	1350	1150

All forces and torques relate to the following:
existing values / table values

$$\frac{Fy}{Fy_{dyn}} + \frac{Fz}{Fz_{dyn}} + \frac{Mx}{Mx_{dyn}} + \frac{My}{My_{dyn}} + \frac{Mz}{Mz_{dyn}} \leq 1$$

No-load torque						
Nm	0,6	0,7	0,9	1,2	1,4	1,8
Speed						
(m/sec) max	5	5	6	8	10	10
Tensile force						
permanent (N)	298	298	679	679	1210	1900
0,2 sec (N)	333	333	746	746	1331	2090
Geometrical moments of inertia of aluminium profile						
I_x mm^4	$6,79 \times 10^5$	$6,79 \times 10^5$	$18,99 \times 10^5$	$18,99 \times 10^5$	$44,4 \times 10^5$	$101,5 \times 10^5$
I_y mm^4	$6,97 \times 10^5$	$6,97 \times 10^5$	$18,97 \times 10^5$	$18,97 \times 10^5$	$44,8 \times 10^5$	$101,5 \times 10^5$
E-Modulus N/mm^2	70000	70000	70000	70000	70000	70000

For life-time calculation of rollers use our CD-ROM or homepage!

Formula: ELZZ
Driving torque:

$$M_a = \frac{F*P*S_i}{2000*\pi} + M_{leer}$$

$$P_a = \frac{M_a*n}{9550}$$

F = force (N)
P = pulley action perimeter (mm)
S_i = safety factor 1,2 ... 2
M_{leer} = no-load torque (Nm)
n = rpm pulley (min^{-1})
M_a = driving torque (Nm)
P_a = motor power (KW)

$$f = \frac{F*L^3}{E*I*192}$$

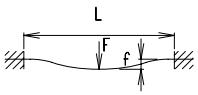

f = deflection (mm)
F = load (N)
L = free length (mm)
E = elastic modulus 70000 (N/mm^2)
I = second moment of area (mm^4)

nookindustries.com toll-free 1 (800) 321-7800
www.nookindustries.ru (499) 703 35 98 sell@nookindustries.ru

Modular Linear Actuator
ELZZ 60, 60S, 80, 80S, 100, 125

Dimensions (mm)

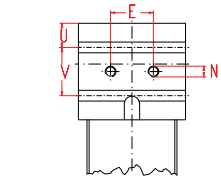

Increasing the carriage length will increase the basic length by the same amount.

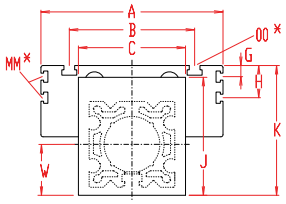

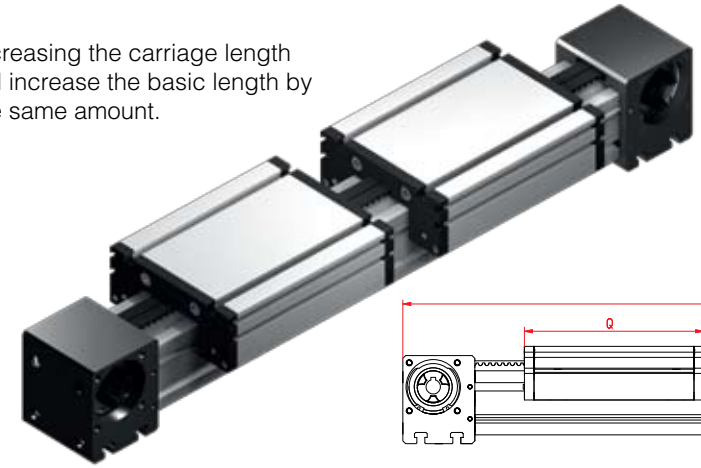

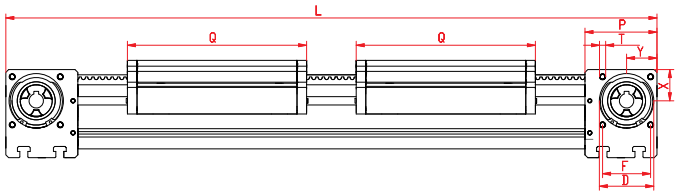

*For slide nuts refer to chapter 2.2 page 2

Size	Basic length L	A	B	C	D	E	F	G	H	J	K	MM for	N	OO for	P	Q	T	U	V	W	X	Y	Basic weight	Weight per 100 mm
ELZZ 60	460	144	96	80	47	30	42	-	-	82	90	-	M 8	M 8	59	168	M 6	14	30	41	27	26	7,4 kg	0,62 kg
ELZZ 60S	510	170	108	80	47	30	42	-	-	82	94	-	M 8	M 8	59	194	M 6	14	30	41	27	26	9,4 kg	0,62 kg
ELZZ 80	570	170	117	100	68	40	60	10	30	110	121	M 6	M 10	M 10	90	194	M 8	22,5	45	51	39	38	12,8 kg	1,00 kg
ELZZ 80S	610	190	126	100	68	40	60	12,5	30	110	122	M 6	M 10	M 8	90	214	M 8	22,5	45	51	39	38	14,8 kg	1,00 kg
ELZZ 100	830	230	155	130	90	50	80	-	29	135	154	M 10	M 12	M 10	110	300	M 10	64	50	65	50	50	33,0 kg	1,60 kg
ELZZ 125	990	295	200	160	110	60	100	-	30	167	191	M 10	M 12	M 12	130	365	M 10	38	50	82	60	60	52,0 kg	2,10 kg

Choice of guide body profile:

[0] **(0)** Standard **(1)** stainless guide rods **(2)** stainless guide rods and screws **(3)** stainless guide rods, rollers and screws

Choice of carriages:

[0] **(0)**

(1)

Size	Version 1	
	Q	L
60	184	492
60S	214	550
80	210	602
80S	234	650
100	316	862
125	389	1038

Coupling - shaft mounting:

[0]

The standard version is supplied without shaft.

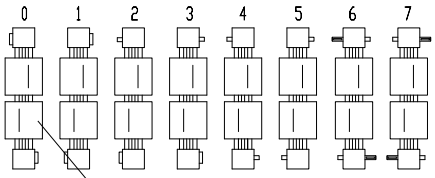

connected with the left belt

Coupling claw on one side

Standard-shaft[1]

Shaft one size smaller[2]

Belt table

Code No.		Size	Belt	mm/rev.	Number of teeth
0	**2**	60 (S)	5M09	130	26
0	**5**	80 (S)	8M12	192	24
0	**6**	100	8M20	256	32
0	**7**	125	8M30	304	38

Shaft dimensions

Size	Shaft ø h6 x length	Key
60 (S)[1]	14 x 35	5x5x28
60 (S)[2]	10 x 27	3x3x25
80 (S)[1]	18 x 45	6x6x40
80 (S)[2]	14 x 35	5x5x28
100[1]	22 x 45	6x6x40
100[2]	18 x 45	6x6x40
125[1]	30 x 55	8x7x40
125[2]	22 x 45	6x6x40

Basic Length + Stroke + Overtravel** = total length
**Minimum 25mm on each end

ELZZ	60	4	0	0	0	0	2	1	01500
	Pos.	1	2	3	4	5	6	7	

For combination kits and connecting elements refer to chapter 2.2

Sample ordering code:
ELZZ 60 with standard body profile, standard carriage and coupling claw on one side, 1040 mm stroke

Modular Linear Actuator
ELSZ 40, 60, 60S, 80, 80S, 100, 125

With Standard Belt **Specifications**

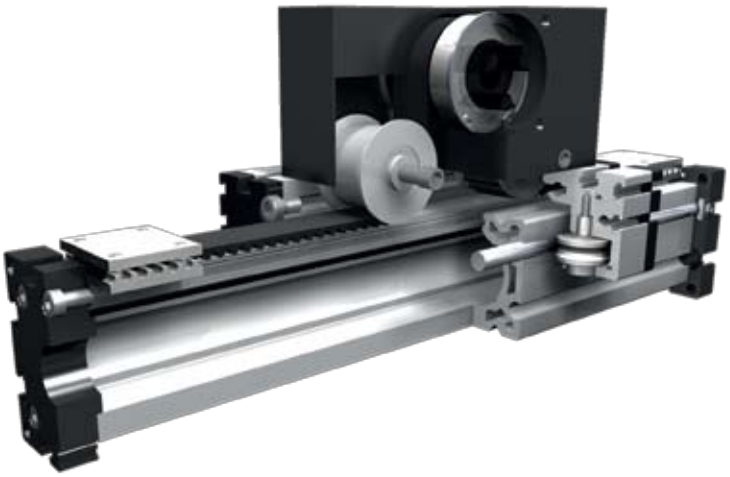

Function:
This linear unit consists of an aluminium square profile with hardened steel guide rods. The carriage, which has internal linear ball bearings that can be adjusted free of play, is driven along the guide rods by a timing belt. The pulley has maintenance-free ball bearings. Belt tension can be readjusted by a simple tensioning device in one of the end blocks. This device can also be used for symmetrical adjustment of two or more linear units running parallel.

Fitting position: As required. Max. length without joints 6.000 mm.
Carriage mounting: By T-slots.
Unit mounting: By T-slots or tapped holes in the bearing blocks, or mounting sets.
Belt type: HTD with steel reinforcement, no backlash when changing direction, repeatability ± 0,1 mm.

Forces and torques

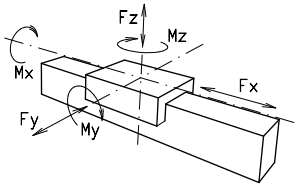

Size	ELSZ 40		ELSZ 60		ELZ 60 S		ELSZ 80		ELSZ 80 S		ELSZ 100		ELSZ 125	
Forces/Torques	static	dy-nam.	static	dy-nam.	static	dy-nam.	static	dy-nam.	static	dy-nam.	static	dy-nam.	static	dy-nam.
F_x (N)	390	350	894	800	894	800	1900	1800	1900	1800	4000	3800	5900	5750
F_y (N)	1200	700	3000	2000	4100	3100	3000	2000	4600	3600	8000	6500	12000	9000
F_z (N)	900	650	1700	1100	2160	1600	1700	1100	3000	1800	3600	2200	6000	4500
M_x (Nm)	25	20	67	43	88	65	90	55	170	140	300	230	600	450
M_y (Nm)	32	18	90	70	190	140	110	80	270	230	400	270	750	600
M_z (Nm)	35	25	120	100	230	170	150	120	300	220	750	500	1350	1150

All forces and torques relate to the following:

existing values / table values

$$\frac{Fy}{Fy_{dyn}} + \frac{Fz}{Fz_{dyn}} + \frac{Mx}{Mx_{dyn}} + \frac{My}{My_{dyn}} + \frac{Mz}{Mz_{dyn}} \leq 1$$

No-load torque							
Nm	0,7	0,9	0,9	1,1	1,2	1,5	1,8
Speed							
(m/sec) max	4	5	7	6	8	8	10
Tensile force							
permanent (N)	390	900	900	1900	1900	4000	5900
0,2 sec (N)	480	1000	1000	2090	2090	4300	6350
Geometrical moments of inertia of aluminium profile							
I_x mm^4	$1{,}32 \times 10^5$	$6{,}79 \times 10^5$	$6{,}79 \times 10^5$	$18{,}99 \times 10^5$	$18{,}99 \times 10^5$	$44{,}4 \times 10^5$	$101{,}5 \times 10^5$
I_y mm^4	$1{,}34 \times 10^5$	$6{,}97 \times 10^5$	$6{,}97 \times 10^5$	$18{,}97 \times 10^5$	$18{,}97 \times 10^5$	$44{,}8 \times 10^5$	$101{,}5 \times 10^5$
E-Modulus N/mm^2	70000	70000	70000	70000	70000	70000	70000

Formula: ELSZ
Driving torque:

$$M_a = \frac{F*P*S_i}{2000*\pi} + M_{leer}$$

$$P_a = \frac{M_a*n}{9550}$$

F = force (N)
P = pulley action perimeter (mm)
S_i = safety factor 1,2 ... 2
M_{leer} = no-load torque (Nm)
n = rpm pulley (min^{-1})
M_a = driving torque (Nm)
P_a = motor power (KW)

$$f = \frac{F*L^3}{E*I*192}$$

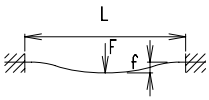

f = deflection (mm)
F = load (N)
L = free length (mm)
E = elastic modulus 70000 (N/mm^2)
I = second moment of area (mm^4)

nookindustries.com toll-free 1 (800) 321-7800
www.nookindustries.ru (499) 703 35 98 sell@nookindustries.ru

Modular Linear Actuator
ELSZ 40, 60, 60S, 80, 80S, 100, 125

Dimensions (mm)

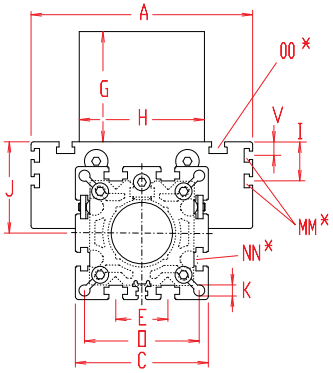

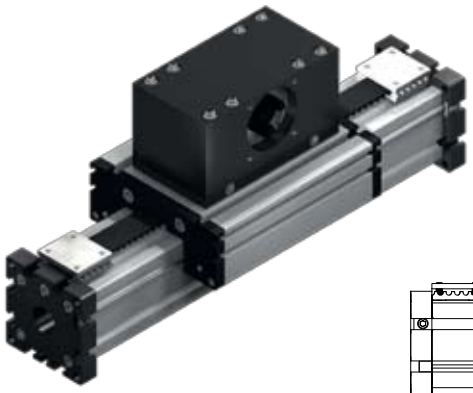

Increasing the carriage length will increase the basic length by the same amount.

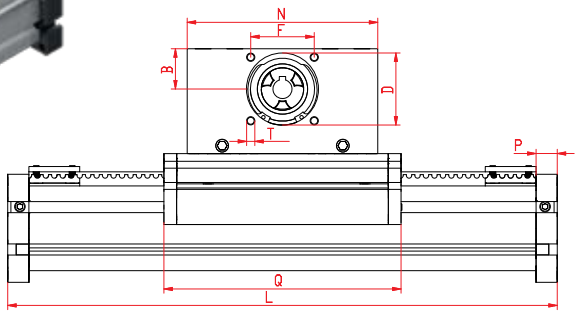

*For slide nuts refer to chapter 2.2 page 2

Size	Basic length L	A	B	C	D	E	F	G	H	I	J	K	MM for	N	NN for	O	OO for	P	Q	T	V	Basic weight	Weight per 100 mm
ELSZ 40	230	100	20	58	37	25	32	65	60	-	35	6,5	-	110	M 6	47	M 6	12	144	M 5	-	2,1 kg	0,24 kg
ELSZ 60	260	144	30	82	47	30	42	80	80	-	49	8,5	-	130	M 8	69	M 8	16	168	M 6	-	5,1 kg	0,62 kg
ELSZ 60S	305	170	30	82	47	30	42	80	80	-	53	8,5	-	130	M 8	69	M 8	16	194	M 6	-	6,1 kg	0,62 kg
ELSZ 80	365	170	39	102	68	40	60	100	100	30	70	8,5	M 6	180	M 10	88	M 10	20	214	M 8	10	11,0 kg	1,00 kg
ELSZ 80S	375	190	39	102	68	40	60	100	100	30	71	8,5	M 6	180	M 8	88	M 8	20	225	M 8	12,5	12,0 Kg	1,00 Kg
ELSZ 100	535	230	60	130	90	50	80	130	130	29	89	10,5	M 10	270	M 12	112	M 10	30	310	M 10	-	25,8 kg	1,60 kg
ELSZ 125	595	295	62	165	110	60	100	139	160	30	107,5	M 10	M 10	310	M 12	140	M 12	30	365	M 10	-	54,5 kg	1,94 kg

Choice of guide body profile:

0 **(0)** Standard **(1)** stainless guide rods **(2)** stainless guide rods and screws **(3)** stainless guide rods, rollers and screws

Choice of carriages:

(0)

(1)

0

(2)

(3)

Size	Version 1		Version 2		Version 3	
	Q	L	Q	L	Q	L
40	237	325	160	246	253	341
60	303	415	184	296	319	431
60S	329	431	214	325	349	451
80	379	525	230	351	395	541
80S	399	545	245	395	419	565
100	535	760	326	536	551	776
125	640	870	389	619	664	894

Coupling - shaft mounting:

0

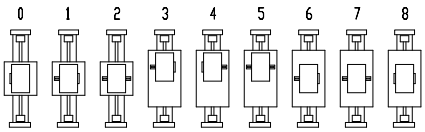

Version 8 is the same as 0, but with double sided coupling claw.

The standard version is supplied without shaft. A shaft can be retrofitted by inserting it into the pulley bore and securing it with 2 locking rings or tension sets (size 100 + 125).

Belt table

Code No.		Size	Belt	mm/rev.	Number of teeth
0	**3**	40	5M15	100	20
0	**4**	60 (S)	5M25	130	26
0	**7**	80 (S)	8M30	192	24
0	**9**	100	8M50	256	32
1	**0**	125	8M70	304	38

Shaft dimensions

Size	Shaft ø h6 x length	Key
40	10 x 27	3x3x25
60 (S)	14 x 35	5x5x28
80 (S)	18 x 45	6x6x40
100	22 x 45	6x6x40
125	30 x 55	8x7x40

ELSZ	60	0	0	0	0	0	4	1	01500
	Pos.	1	2	3	4	5	6	7	

Basic Length + Stroke + Overtravel** = total length
**Minimum 25mm on each end

For combination kits and connecting elements refer to chapter 2.2

Sample ordering code:
ELSZ 60 with standard body profile, standard carriage and coupling claw on one side, 1220 mm stroke.

Modular Linear Actuator
ELSZ 30, 40, 60, 60S, 80, 80S, 100, 125

With Widened Belt Drive **Specifications**

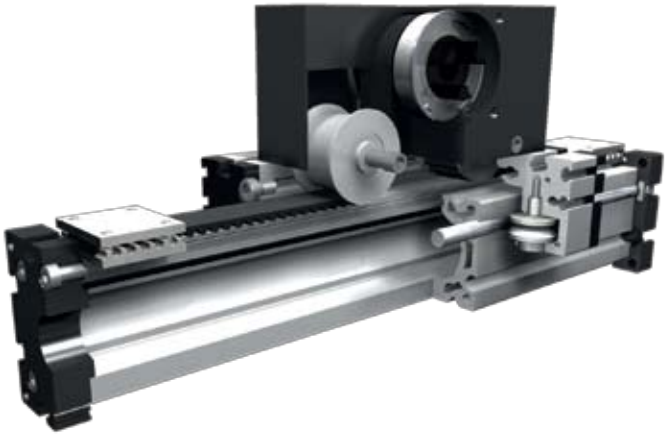

3.1

Function:
This linear unit consists of an aluminium square profile with hardened steel guide rods. The carriage, which has internal linear ball bearings that can be adjusted free of play, is driven along the guide rods by a timing belt. The pulley has maintenance-free ball bearings. Belt tension can be readjusted by a simple tensioning device in one of the end blocks. This device can also be used for symmetrical adjustment of two or more linear units running parallel.

Forces and torques

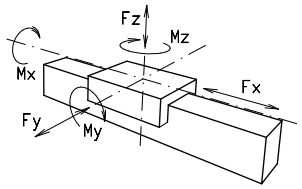

Fitting position: As required. Max. length without joints 6.000 mm.
Carriage mounting: By T-slots.
Unit mounting: By T-slots or tapped holes in the bearing blocks, or mounting sets.
Belt type: HTD with steel reinforcement, no backlash when changing direction, repeatability ± 0,1 mm.

Size	ELSZ 30		ELSZ 40		ELSZ 60		ELSZ 60 S		ELSZ 80		ELSZ 80 S		ELSZ 100		ELSZ 125	
Forces/Torques	**static**	**dynam.**	**static**	**dynam.**	**static**	**dynam.**	**static**	**dynam.**	**static**	**dynam.**	**static**	**dynam.**	**static**	**dynam.**	**static**	**dynam.**
F_x (N)	390	350	894	800	1900	1800	1900	1800	4000	3800	4000	3800	5900	5750	7900	7500
F_y (N)	90	60	1200	700	3000	2000	4100	3100	3000	2000	4600	3600	8000	6500	12000	9000
F_z (N)	90	60	900	650	1700	1100	2160	1600	1700	1100	3000	1800	3600	2200	6000	4500
M_x (Nm)	10	5	25	20	67	43	88	65	90	55	170	140	300	230	600	450
M_y (Nm)	13	6	32	18	90	70	190	140	110	80	270	230	400	270	750	600
M_z (Nm)	14	7	35	25	120	100	230	170	150	120	300	220	750	500	1350	1150
All forces and torques relate to the following: existing values / table values $\frac{Fy}{Fy_{dyn}} + \frac{Fz}{Fz_{dyn}} + \frac{Mx}{Mx_{dyn}} + \frac{My}{My_{dyn}} + \frac{Mz}{Mz_{dyn}} \leq 1$																
No-load torque																
Nm	0,5		0,7		0,9		0,9		1,2		1,2		1,5		1,8	
Speed																
(m/sec) max	2		4		5		7		8		8		8		8	
Tensile force																
permanent (N)	390		894		1 900		1900		4000		4000		5900		7900	
0,2 sec (N)	480		480		2090		2090		4300		4300		6350		8500	
Geometrical moments of inertia of aluminium profile																
I_x mm^4	$4{,}09 \times 10^4$		$1{,}32 \times 10^5$		$6{,}79 \times 10^5$		$6{,}79 \times 10^5$		$18{,}99 \times 10^5$		$18{,}99 \times 10^5$		$44{,}4 \times 10^5$		$101{,}5 \times 10^5$	
I_y mm^4	$4{,}00 \times 10^4$		$1{,}34 \times 10^5$		$6{,}97 \times 10^5$		$6{,}97 \times 10^5$		$18{,}97 \times 10^5$		$18{,}97 \times 10^5$		$44{,}8 \times 10^5$		$101{,}5 \times 10^5$	
E-Modulus N/mm²	70000		70000		70000		70000		70000		70000		70000		70000	

Formula: ELSZ
Driving torque:

$$M_a = \frac{F*P*S_i}{2000*\pi} + M_{leer}$$

$$P_a = \frac{M_a*n}{9550}$$

F = force (N)
P = pulley action perimeter (mm)
S_i = safety factor 1,2 ... 2
M_{leer} = no-load torque (Nm)
n = rpm pulley (min^{-1})
M_a = driving torque (Nm)
P_a = motor power (KW)

$$f = \frac{F*L^3}{E*I*192}$$

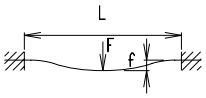

f = deflection (mm)
F = load (N)
L = free length (mm)
E = elastic modulus 70000 (N/mm²)
I = second moment of area (mm⁴)

Modular Linear Actuator

ELSZ 30, 40, 60, 60S, 80, 80S, 100, 125

Dimensions (mm)

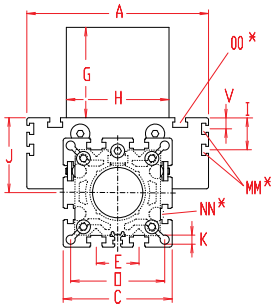

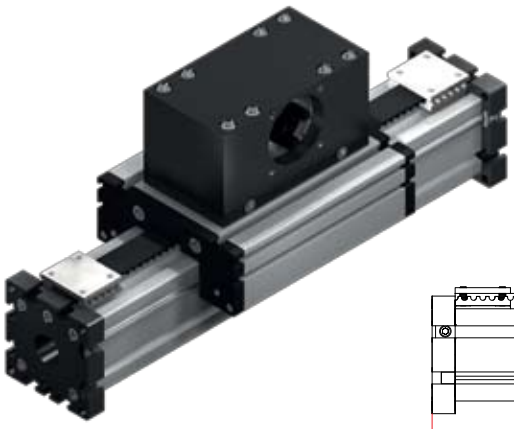

Increasing the carriage length will increase the basic length by the same amount.

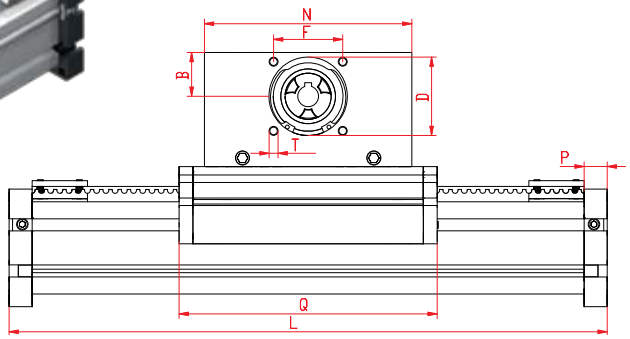

*For slide nuts refer to chapter 2.2 page 2

Size	Basic length L	A	B	C	D	E	F	G	H	I	J	K	MM for	N	NN for	O	OO for	P	Q	T	V	Basic weight	Weight per 100 mm
ELSZ 30	210	70	20	42	37	-	32	55	60	-	26	4,2	-	110	M 6	35	M 6	12	128	M 5	-	1,5 kg	0,16 kg
ELSZ 40	260	100	30	58	47	25	42	83	80	-	35	6,5	-	130	M 6	47	M 6	12	164	M 6	-	2,7 kg	0,24 kg
ELSZ 60	355	144	39	82	68	30	60	105	100	-	49	8,5	-	180	M 8	69	M 8	16	214	M 8	-	6,3 kg	0,62 kg
ELSZ 60S	355	170	34	82	68	30	60	105	100	-	53	8,5	-	180	M 8	69	M 8	16	214	M 8	-	7,3 kg	0,62 kg
ELSZ 80	460	170	60	102	90	40	80	140	130	30	70	8,5	M 6	270	M 10	88	M 10	20	304	M 10	10	14,0 kg	1,00 kg
ELSZ 80S	460	190	60	102	90	40	80	139	130	30	71	8,5	M 6	270	M 8	88	M 8	20	304	M 10	12,5	15,0 Kg	1,00 Kg
ELSZ 100	575	230	62	130	110	50	100	143	160	29	89	10,5	M 10	310	M 12	112	M 10	30	350	M 10	-	31,0 kg	1,60 kg
ELSZ 125	595	295	62	165	110	60	100	139	180	30	107,5	M 10	M 10	310	M 12	140	M 12	30	365	M 10	-	57,4 kg	1,96 kg

Choice of guide body profile:

0 **(0)** Standard **(1)** stainless guide rods **(2)** stainless guide rods and screws **(3)** stainless guide rods, rollers and screws

Choice of carriages:

0

(0)

(1)

(2)

(3)

Size	Version 1		Version 2		Version 3	
	Q	L	Q	L	Q	L
30	195	279	140	222	207	291
40	257	355	180	276	273	371
60	353	494	230	371	369	510
60S	379	520	234	375	399	540
80	469	625	320	476	485	641
80S	489	645	324	480	509	665
100	575	800	366	591	591	816
125	640	870	389	619	664	894

Coupling - shaft mounting:

0

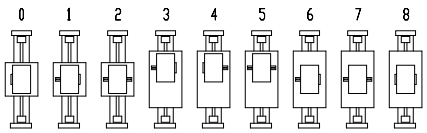

Version 8 is the same as 0, but with double sided coupling claw.

The standard version is supplied without shaft. A shaft can be retrofitted by inserting it into the pulley bore and securing it with 2 locking rings or tension sets
(size 80 + 100).

Belt table

Code No.		Size	Belt	mm/rev.	Number of teeth
0	**3**	30	5M15	100	20
0	**4**	40	5M25	130	26
0	**7**	60 (S)	8M30	192	24
0	**9**	80 (S)	8M50	256	32
1	**0**	100	8M70	304	38
1	**4**	125	8M100	304	38

Shaft dimensions

Size	Shaft ø h6 x length	Key
30	10 x 27	3x3x25
40	14 x 35	5x5x28
60 (S)	18 x 45	6x6x40
80 (S)	22 x 45	6x6x40
100	30 x 55	8x7x40
125	40 x 55	12x8x50

ELSZ	60	0	0	0	0	0	7	1	01500
	Pos.	1	2	3	4	5	6	7	

Basic Length + Stroke + Overtravel** = total length
**Minimum 25mm on each end

For combination kits and connecting elements refer to chapter 2.2

Sample ordering code:
ELSZ 60 with standard body profile, standard carriage with widened belt and coupling claw on one side, 1170 mm stroke.

Modular Linear Actuator
ELSD 40, 60, 60S, 80, 80S, 100

Belt Drive With Rotary Shaft **Specifications**

Function:
Same as ELSZ, but with an additional rotary shaft, fitted within the aluminium body. One end can be driven by any suitable motor, and the other end is provided with a shaft with feather key and an axial tapped hole for fitting grippers or other components.

Fitting position: As required. Max. length 2.000 mm.
Carriage mounting: By T-slots.
Unit mounting: By T-slots or tapped holes in the bearing blocks, mounting sets.
Belt type: HTD with steel reinforcement, no backlash when changing direction, repeatability ± 0,1 mm.

Forces and torques

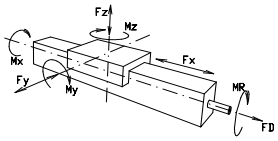

Size	ELSD 40		ELSD 60		ELSD 60 S		ELSD 80		ELSD 80 S		ELSD 100	
Forces/Torques	static	dyna-mic	static	dyna-mic	static	dyna-mic	static	dyna-mic	static	dyna-mic	static	dyna-mic
F_x (N)	390	350	894	800	894	800	1900	1800	1900	1800	4000	3800
F_y (N)	1200	700	3000	2000	4100	3100	3000	2000	4600	3600	8000	6500
F_z (N)	900	650	1700	1100	2160	1600	1700	1100	3000	1800	3600	2200
F_D (N)	50		150		150		250		250		400	
M_x (Nm)	25	20	67	43	88	65	90	55	170	140	300	230
M_y (Nm)	32	18	90	70	190	140	110	80	270	230	400	270
M_z (Nm)	35	25	120	100	230	170	150	120	300	220	750	500
M_R (Nm)	5		10		10		20		20		30	
All forces and torques relate to the following: existing values / table values $\frac{Fy}{Fy_{dyn}} + \frac{Fz}{Fz_{dyn}} + \frac{Mx}{Mx_{dyn}} + \frac{My}{My_{dyn}} + \frac{Mz}{Mz_{dyn}} \leq 1$												
No-load torque												
Nm	0,7		0,9		0,9		1,1		1,2		1,5	
Stiction torque M_R (Nm)	0,1		0,1		0,1		0,1		0,1		0,1	
Speed												
(m/sec) max	4		5		7		6		8		8	
Tensile force												
permanent (N)	390		900		900		1900		1900		4000	
0,2 sec (N)	480		1000		1000		2090		2090		4300	
Geometrical moments of inertia of aluminium profile												
I_x mm^4	$1,32 \times 10^5$		$6,79 \times 10^5$		$6,79 \times 10^5$		$18,99 \times 10^5$		$18,99 \times 10^5$		$44,4 \times 10^5$	
I_y mm^4	$1,34 \times 10^5$		$6,97 \times 10^5$		$6,97 \times 10^5$		$18,97 \times 10^5$		$18,97 \times 10^5$		$44,8 \times 10^5$	
E-Modulus N/mm^2	70000		70000		70000		70000		70000		70000	

Formula: ELSD
Driving torque:

$$M_a = \frac{F*P*S_i}{2000*\pi} + M_{leer}$$

$$P_a = \frac{M_a*n}{9550}$$

F = force (N)
P = pulley action perimeter (mm)
S_i = safety factor 1,2 ... 2
M_{leer} = No-load torque (Nm)
n = rpm pulley (min^{-1})
M_a = driving torque (Nm)
P_a = motor power (KW)

$$f = \frac{F*L^3}{E*I*192}$$

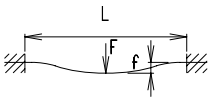

f = deflection (mm)
F = load (N)
L = free length (mm)
E = elastic modulus 70000 (N/mm^2)
I = second moment of area (mm^4)

nookindustries.com toll-free 1 (800) 321-7800
www.nookindustries.ru (499) 703 35 98 sell@nookindustries.ru

Modular Linear Actuator
ELSD 40, 60, 60S, 80, 80S, 100

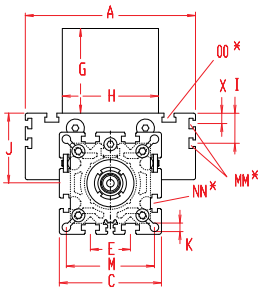

Dimensions (mm)

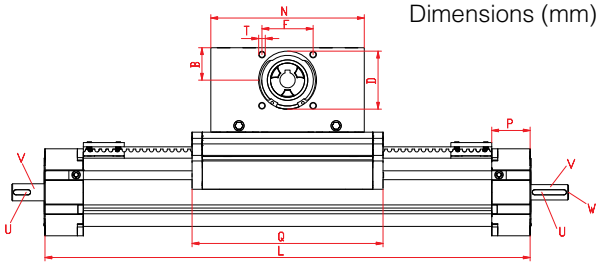

Increasing the carriage length will increase the basic length by the same amount.

*For slide nuts refer to chapter 2.2 page 2

Shaft (drive end)			Shaft (load end)		
Size	Shaft ø h6 x length (V)	Key (U)	Shaft ø h6 x length (V)	Key (U)	Thread (W)
40	10 x 20	3x3x10	12 x 20	4x4x10	M 6 x 12
60 (S)	14 x 25	5x5x20	17 x 25	5x5x20	M 8 x 20
80 (S)	18 x 30	6x6x20	20 x 30	6x6x20	M 10 x 20
100	22 x 35	6x6x30	25 x 35	8x7x30	M 12 x 25

3.1

Size	Basic length L	A	B	C	D	E	F	G	H	I	J	K	M	MM for	N	NN for	OO for	P	Q	T	X	Basic weight	Weight per 100 mm
ELSD 40	260	100	20	58	37	25	32	65	60	-	35	6,5	47	-	110	M 6	M 6	25	142	M 5	-	2,4 kg	0,40 kg
ELSD 60	320	144	30	82	47	30	42	80	80	-	49	8,5	69	-	130	M 8	M 8	35	168	M 6	-	5,9 kg	0,87 kg
ELSD 60S	345	170	30	82	47	30	42	80	80	-	53	8,5	69	-	130	M 8	M 8	35	194	M 6	-	6,9 kg	0,87 kg
ELSD 80	410	170	39	102	68	40	60	100	100	30	70	8,5	88	M 6	180	M 10	M 10	45	214	M 8	10	12,5 kg	1,30 kg
ELSD 80S	420	190	39	102	68	40	60	100	100	30	71	8,5	88	M 6	180	M 10	M 8	45	224	M 8	12,5	14,0 kg	1,30 kg
ELSD 100	570	230	60	130	90	50	80	130	130	29	89	10,5	112	M10	270	M 10	M 10	55	310	M 10	-	27,0 kg	1,70 kg

Choice of guide body profile:

0 **(0)** Standard **(1)** stainless guide rods **(2)** stainless guide rods and screws **(3)** stainless guide rods, rollers and screws

Choice of carriages:

0

(0)

(1)

(2)

(3)

Size	Version 1		Version 2		Version 3	
	Q	L	Q	L	Q	L
40	237	325	158	246	253	341
60	303	415	184	296	319	431
60S	329	431	214	326	349	452
80	379	525	230	376	395	541
80S	399	545	244	390	419	565
100	535	745	326	536	551	761
125	640	870	389	619	664	894

Coupling - shaft mounting:

0

0

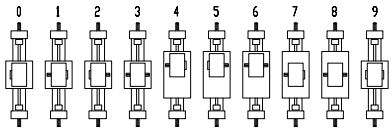

Version 9 is the same as 0, but with double sided coupling claw.

The standard version is supplied without shaft. A shaft can be retrofitted by inserting it into the pulley bore and securing it with 2 locking rings or tension sets (size 100).

Belt table

Code No.		Size	Belt	mm/rev.	Number of teeth
0	**3**	40	5M15	100	20
0	**4**	60 (S)	5M25	130	26
0	**7**	80 (S)	8M30	192	24
0	**9**	100	8M50	256	32

Shaft dimensions

Size	Shaft ø h6 x length	Key
40	10 x 27	3x3x25
60 (S)	14 x 35	5x5x28
80 (S)	18 x 45	6x6x40
100	22 x 45	6x6x40

Basic Length + Stroke + Overtravel** = total length
**Minimum 25mm on each end

ELSD	60	0	0	0	0	0	4	1	01500
	Pos.	1	2	3	4	5	6	7	

For combination kits and connecting elements refer to chapter 2.2

Sample ordering code:
ELSD 60 with standard body profile, standard carriage and coupling claw on one side, 1180 mm stroke

Modular Linear Actuator
ELSD 40, 60, 60S, 80, 80S, 100

Belt Drive With Widened Belt And Rotary Shaft **Specifications**

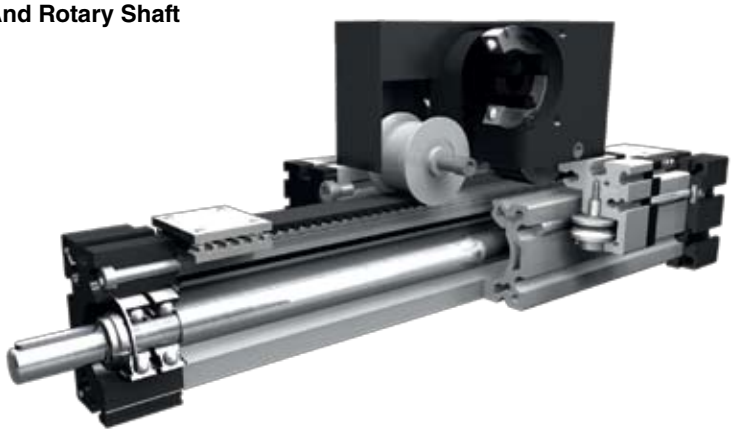

Function:
Same as ELSZ, but with an additional rotary shaft, fitted within the aluminium body. One end can be driven by any suitable motor, and the other end is provided with a shaft with feather key and an axial tapped hole for fitting grippers or other components.

Fitting position: As required. Max. length 2.000 mm.
Carriage mounting: By T-slots.
Unit mounting: By T-slots or tapped holes in the bearing blocks, mounting sets.
Belt type: HTD with steel reinforcement, no backlash when changing direction, repeatability ± 0,1 mm.

Forces and torques

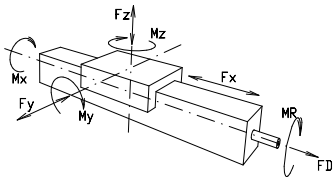

Size	ELSD 40		ELSD 60		ELSD 60 S		ELSD 80		ELSD 80 S		ELSD 100	
Forces/Torques	static	dyna-mic	static	dyna-mic	static	dyna-mic	static	dyna-mic	static	dyna-mic	static	dyna-mic
F_x (N)	894	800	1900	1800	1900	1800	4000	3800	4000	3800	5900	5750
F_y (N)	1200	700	3000	2000	4100	3100	3000	2000	4600	3600	8000	6500
F_z (N)	900	650	1700	1100	2160	1600	1700	1100	3000	1800	3600	2200
F_D (N)	50		150		150		250		250		400	
M_x (Nm)	25	20	67	43	88	65	90	55	170	140	300	230
M_y (Nm)	32	18	90	70	190	140	110	80	270	230	400	270
M_z (Nm)	35	25	120	100	230	170	150	120	300	220	750	500
M_R (Nm)	5		10		10		20		20		30	
All forces and torques relate to the following:												
existing values / table values	$\frac{Fy}{Fy_{dyn}} + \frac{Fz}{Fz_{dyn}} + \frac{Mx}{Mx_{dyn}} + \frac{My}{My_{dyn}} + \frac{Mz}{Mz_{dyn}} \leq 1$											
No-load torque												
Nm	0,7		0,9		0,9		1,1		1,2		1,5	
Stiction torque M_R (Nm)	0,1		0,1		0,1		0,1		0,1		0,1	
Speed												
(m/sec) max	4		5		7		6		8		8	
Tensile force												
permanent (N)	900		1900		1900		4000		4000		5900	
0,2 sec (N)	1000		2090		2090		4300		4300		6350	
Geometrical moments of inertia of aluminium profile												
I_x mm^4	$1{,}32 \times 10^5$		$6{,}79 \times 10^5$		$6{,}79 \times 10^5$		$18{,}99 \times 10^5$		$18{,}99 \times 10^5$		$44{,}4 \times 10^5$	
I_y mm^4	$1{,}34 \times 10^5$		$6{,}97 \times 10^5$		$6{,}97 \times 10^5$		$18{,}97 \times 10^5$		$18{,}97 \times 10^5$		$44{,}8 \times 10^5$	
E-Modulus N/mm^2	70000		70000		70000		70000		70000		70000	

Formula: ELSD
Driving torque:

$$M_a = \frac{F*P*S_i}{2000*\pi} + M_{leer}$$

$$P_a = \frac{M_a*n}{9550}$$

F = force (N)
P = pulley action perimeter (mm)
S_i = safety factor 1,2 ... 2
M_{leer} = No-load torque (Nm)
n = rpm pulley (min^{-1})
M_a = driving torque (Nm)
P_a = motor power (KW)

$$f = \frac{F*L^3}{E*I*192}$$

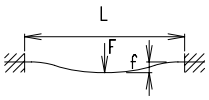

f = deflection (mm)
F = load (N)
L = free length (mm)
E = elastic modulus 70000 (N/mm^2)
I = second moment of area (mm^4)

nookindustries.com toll-free 1 (800) 321-7800
www.nookindustries.ru (499) 703 35 98 sell@nookindustries.ru

Modular Linear Actuator
ELSD 40, 60, 60S, 80, 80S, 100

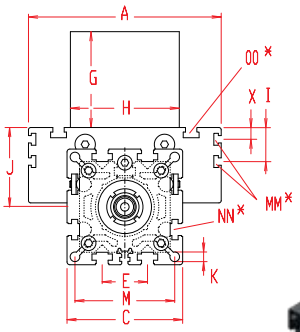

Increasing the carriage length will increase the basic length by the same amount.

Dimensions (mm)

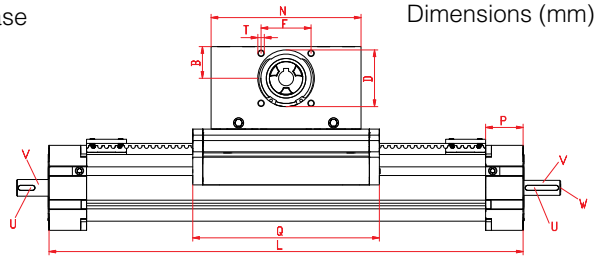

Shaft (drive end)			Shaft (load end)		
Size ⊠	Shaft ø h6 x length (V)	Key (U)	Shaft ø h6 x length (V)	Key (U)	Thread (W)
40	10 x 20	3x3x10	12 x 20	4x4x10	M 6 x 12
60 (S)	14 x 25	5x5x20	17 x 25	5x5x20	M 8 x 20
80 (S)	18 x 30	6x6x20	20 x 30	6x6x20	M 10 x 20
100	22 x 35	6x6x30	25 x 35	8x7x30	M 12 x 25

3.1

*For slide-nuts refer to chapter 2.2 page 2

Size	Basic length L	A	B	C	D	E	F	G	H	I	J	K	M	MM for	N	NN for	OO for	P	Q	T	X	Basic weight	Weight per 100 mm
ELSD 40	286	100	30	58	47	25	42	83	80	-	35	6,5	47	-	130	M 6	M 6	25	168	M 6	-	2,7 kg	0,40 kg
ELSD 60	354	144	39	82	68	30	60	105	100	-	49	8,5	69	-	180	M 8	M 8	35	218	M 8	-	6,5 kg	0,87 kg
ELSD 60S	379	170	39	82	68	30	60	105	100	-	53	8,5	69	-	180	M 8	M 8	35	204	M 8	-	7,5 kg	0,87 kg
ELSD 80	500	170	60	102	90	40	80	140	130	30	70	8,5	88	M 6	270	M 10	M 10	45	304	M 10	10	13,7 kg	1,30 kg
ELSD 80S	500	190	60	102	90	40	80	140	130	30	71	8,5	88	M 6	270	M 10	M 8	45	304	M 10	12,5	15,2 kg	1,30 kg
ELSD 100	610	230	62	130	110	50	100	143	160	29	89	10,5	112	M10	310	M 10	M 10	55	350	M 10	-	33,4 kg	1,70 kg

Choice of guide body profile:

0

(0) Standard **(1)** stainless guide rods **(2)** stainless guide rods and screws **(3)** stainless guide rods, rollers and screws

Choice of carriages:

0

(0)

(1)

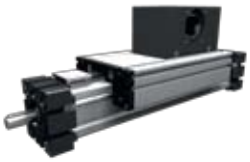

(2)

(3)

Size	Version 1		Version 2		Version 3	
	Q	L	Q	L	Q	L
30	195	279	140	222	209	291
40	257	345	178	266	273	361
60	353	469	230	346	369	485
60S	379	495	234	375	399	515
80	469	615	320	466	485	631
80S	489	635	324	470	509	655
100	575	765	366	556	591	781
125	640	870	389	619	664	894

Coupling - shaft mounting:

0

0

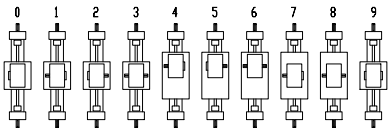

Version 9 is the same as 0, but with double sided coupling claw.

The standard version is supplied without shaft. A shaft can be retrofitted by inserting it into the pulley bore and securing it with 2 locking rings or tension sets (size 80 + 100).

Belt table

Code No.		Size	Belt	mm/rev.	Number of teeth
0	**4**	40	5M25	130	26
0	**7**	60 (S)	8M30	192	24
0	**9**	80 (S)	8M50	256	32
1	**0**	100	8M70	304	38

Shaft dimensions

Size	Shaft ø h6 x length	Key
40	14 x 35	5x5x28
60 (S)	18 x 45	6x6x40
80 (S)	22 x 45	6x6x40
100	30 x 55	8x7x40

Basic Length + Stroke + Overtravel** = total length
**Minimum 25mm on each end

ELSD	60	0	0	0	0	0	7	1	01500
	Pos.	1	2	3	4	5	6	7	

For combination kits and connecting elements refer to chapter 2.2

Sample ordering code:
ELSD 60 with standard body profile, standard carriage and coupling claw on one side, 1146 mm stroke

Modular Linear Actuator
ELZT 40, 60, 60S, 80, 80S, 100

Telescopic Belt Drive **Specifications**

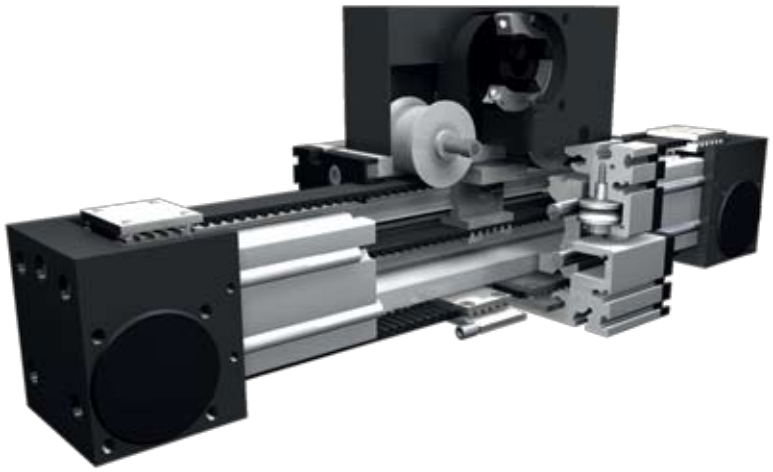

Function:
This unit consists of an aluminium square profile with integrated, hardened steel guide rods. Two carriages, which have internal linear ball bearings that can be adjusted free of play, are driven along the guide rods in opposite directions by 2 belts. The pulleys include maintenance-free ball bearings. One belt is tensioned by a tensioning device within the carriage. The other timing belt is tensioned by a tensioning device within the bearing block. The carriage with the drive block (with motor) is screwed to the crosshead. A T-slot profile is screwed to the carriage as an extension arm which can be adjusted to any length (see functional diagram on page 3/20).

Fitting position: As required. Max. length 3.000 mm.
Unit mounting: By T-slots in the carriage, extension arm
Belt type: HTD with steel reinforcement, no backlash when changing direction, repeatability +- 0,1 mm.

Forces and torques

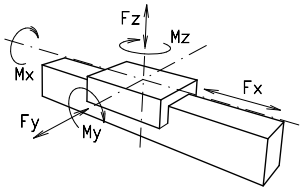

Size	ELZT 40		ELZT 60		ELZT 60 S		ELZT 80		ELZT 80 S		ELZT 100	
Forces/torques	static	dyna-mic	static	dyna-mic	static	dyna-mic	static	dyna-mic	static	dyna-mic	static	dyna-mic
F_x (N)	360	300	580	470	580	470	1800	1570	1800	1570	4000	3500
F_y (N)	1200	700	3000	2000	4100	3100	3000	2000	4600	3600	8000	6500
F_z (N)	900	650	1700	1100	2160	1600	1700	1100	3000	1800	3600	2200
M_x (Nm)	25	20	67	43	88	65	90	55	170	140	300	230
M_y (Nm)	32	18	90	70	190	140	110	80	270	230	400	270
M_z (Nm)	35	25	120	100	230	170	150	120	370	310	750	500

All forces and torques relate to the following:

existing values / table values: $\frac{Fy}{Fy_{dyn}} + \frac{Fz}{Fz_{dyn}} + \frac{Mx}{Mx_{dyn}} + \frac{My}{My_{dyn}} + \frac{Mz}{Mz_{dyn}} \leq 1$

No-load torque						
Nm	0,9	1,1	1,1	1,3	1,2	2,4
Speed						
(m/sec) max	4	5	7	6	8	8
Tensile force						
permanent (N)	360	580	580	1800	1800	4000
0,2 sec (N)	450	700	700	2200	2200	4300
Geometrical moments of inertia of aluminium profile						
I_x mm^4	$1{,}32 \times 10^5$	$6{,}79 \times 10^5$	$6{,}79 \times 10^5$	$18{,}99 \times 10^5$	$18{,}99 \times 10^5$	$44{,}4 \times 10^5$
I_y mm^4	$1{,}34 \times 10^5$	$6{,}97 \times 10^5$	$6{,}97 \times 10^5$	$18{,}97 \times 10^5$	$18{,}97 \times 10^5$	$44{,}8 \times 10^5$
E-Modulus N/mm^2	70000	70000	70000	70000	70000	70000

Formula: ELZT
Driving torque:

$$M_a = \frac{F*P*S_i}{2000*\pi} + M_{leer}$$

$$P_a = \frac{M_a*n}{9550}$$

F	= force	(N)
P	= pulley action perimeter	(mm)
S_i	= safety factor 1,2 ... 2	
M_{leer}	= No-load torque	(Nm)
n	= rpm pulley	(min^{-1})
M_a	= driving torque	(Nm)
P_a	= motor power	(KW)

$$f = \frac{F*L^3}{E*I*192}$$

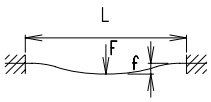

f	= deflection	(mm)
F	= load	(N)
L	= free length	(mm)
E	= elastic modulus 70000	(N/mm^2)
I	= second moment of area	(mm^4)

nookindustries.com toll-free 1 (800) 321-7800
www.nookindustries.ru (499) 703 35 98 sell@nookindustries.ru

Modular Linear Actuator
ELZT 40, 60, 60S, 80, 80S, 100

Dimensions (mm)

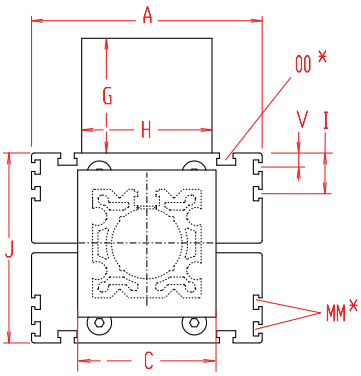

Increasing the carriage length will increase the basic length by the same amount.

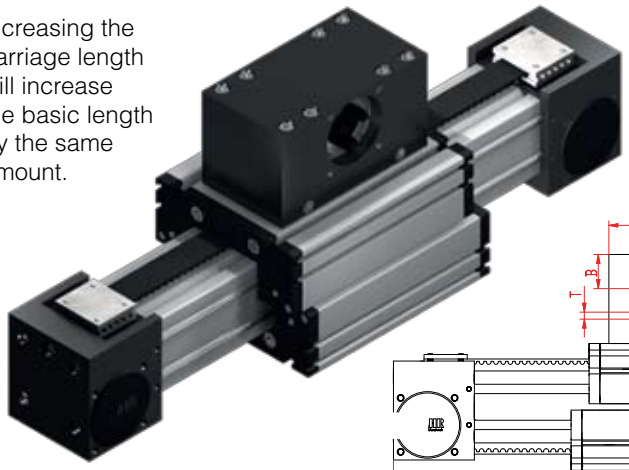

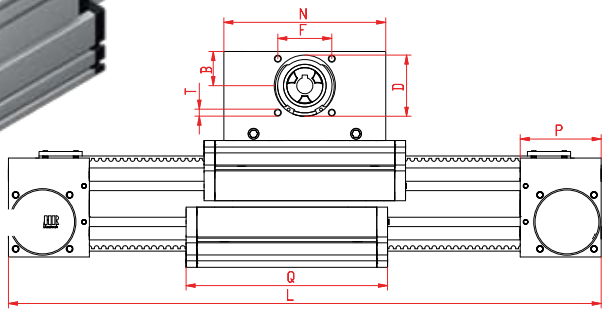

3.1

*For slide nuts refer to chapter 2.2 page 2

Size	Basic length L	A	B	C	D	F	G	H	I	J	MM for	N	OO for	P	Q	T	V	Basic weight	Weight per 100 mm
ELZT 40	265	100	30	58	47	42	83	80	-	70	-	130	M 6	49	164	M 6	-	3,6 kg	0,31 kg
ELZT 60	345	144	39	80	68	60	105	100	-	98	-	180	M 8	59	218	M 8	-	9,1 kg	0,73 kg
ELZT 60S	370	170	39	80	68	60	105	100	-	106	-	180	M 8	59	220	M 8	-	10,1 kg	0,73 kg
ELZT 80	494	170	60	100	90	80	140	130	30	140	M 6	270	M 10	90	304	M 10	10	24,0 kg	1,14 kg
ELZT 80S	494	190	60	100	90	80	140	130	30	142	M 6	270	M 8	90	304	M 10	12,5	26,0 Kg	1,14 kg
ELZT 100	530	230	62	130	110	100	143	160	29	178	M 10	310	M 10	110	350	M 10	-	40,6 kg	1,95 kg

Choice of guide body profile:

0

(0) Standard **(1)** stainless guide rods **(2)** stainless guide rods and screws **(3)** stainless guide rods, rollers and screws

Choice of carriages:

0

(0)

(1)

(2)

(3)

Size	Version 1		Version 2		Version 3	
	Q	L	Q	L	Q	L
40	257	360	257	360	257	360
60	353	480	353	480	353	480
60S	379	506	379	506	379	506
80	469	659	469	659	469	659
80S	489	679	489	679	489	679
100	575	755	575	755	575	755

Coupling - shaft mounting

0

0

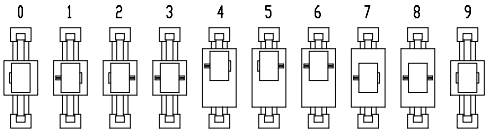

The standard version is supplied without shaft. A shaft can be retrofitted by inserting it into the pulley bore and securing it with 2 locking rings or tension sets (size 80 + 100).

Version 9 is the same as 0, but with double sided coupling claw.

Belt table

Code No.		Size	Belt	mm/rev.	Number of teeth
0	**4**	40	5M25	130	26
0	**7**	60 (S)	8M30	192	24
0	**9**	80 (S)	8M50	256	32
1	**0**	100	8M70	304	38

Shaft dimensions

Size	Shaft ø h6 x length	Key
40	14 x 35	5x5x28
60 (S)	18 x 45	6x6x40
80 (S)	22 x 45	6x6x40
100	30 x 55	8x7x40

Basic Length + Stroke + Overtravel** = total length
**Minimum 25mm on each end

ELZT	60	6	0	0	0	0	4	1	01500
	Pos.	1	2	3	4	5	6	7	

For combination kits and connecting elements refer to chapter 2.2

Sample ordering code:
ELZT 60 with standard body profile, standard carriage and coupling claw on one side, 2310 mm stroke

Function And Possibilities Of Variation

Elzt Belt Drive Unit

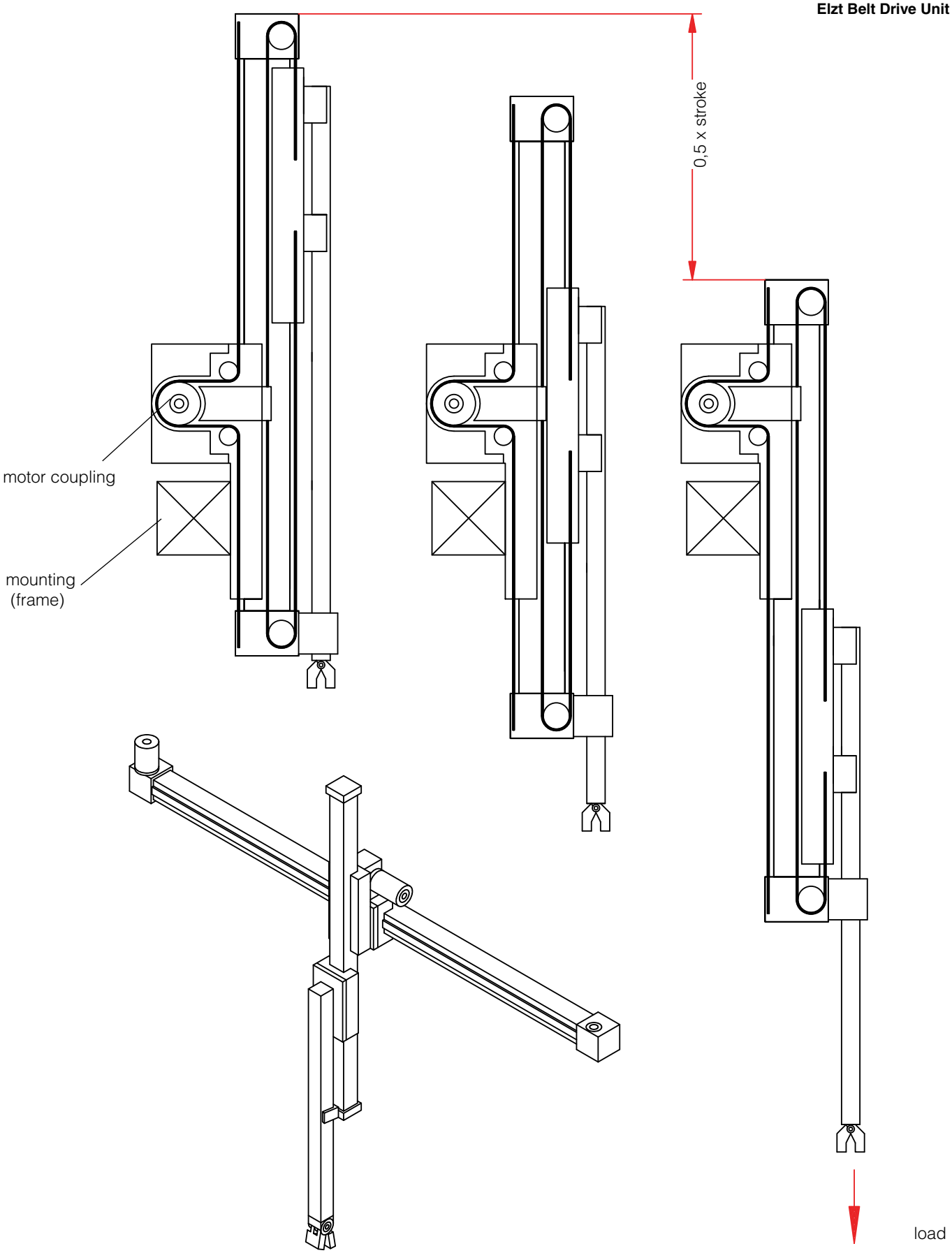

Possible Mounting Styles

Belt Drive Unit

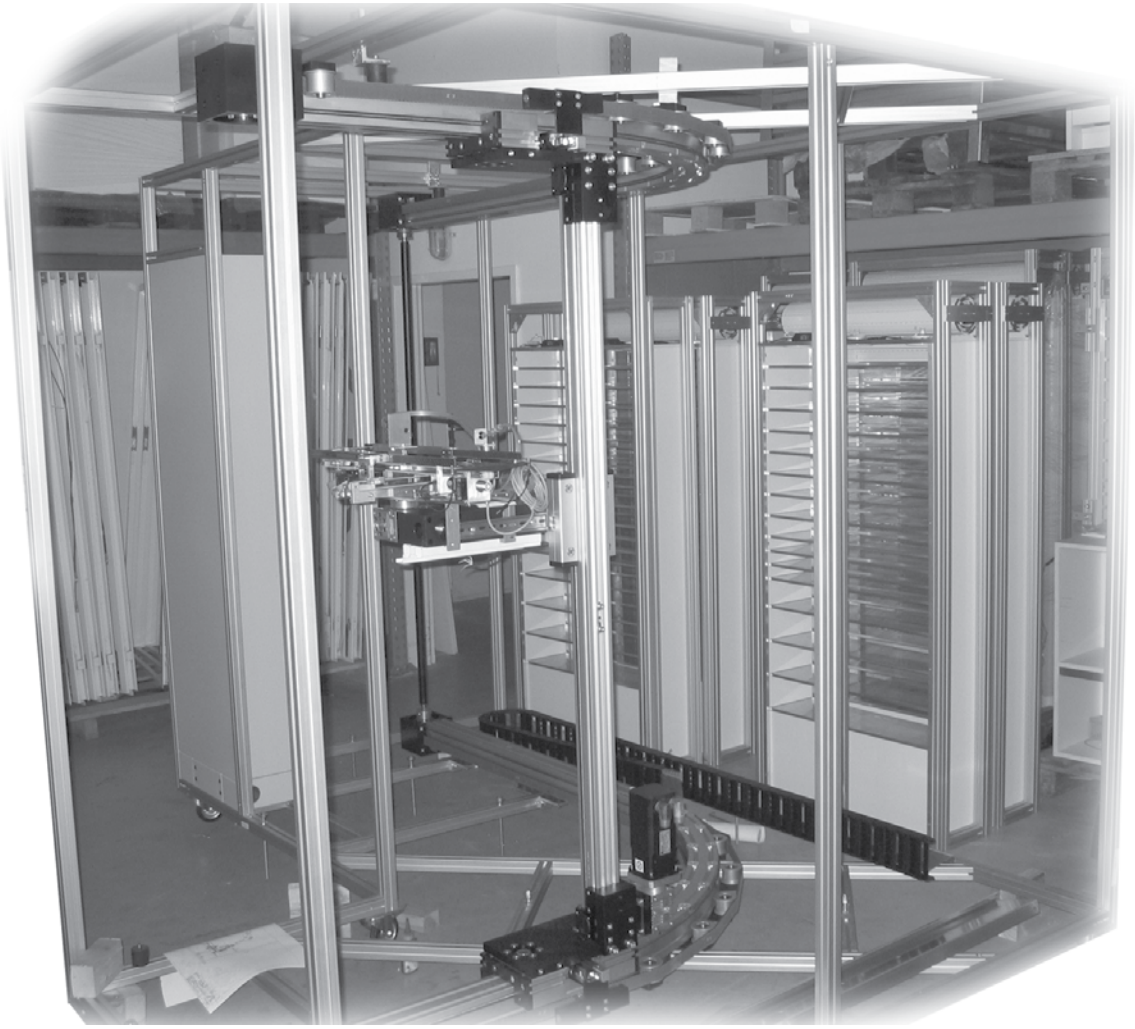

Modular Linear Actuator
ELHZ 60, 60S, 80, 80S, 100, 125

Internal Belt Drive **Specifications**

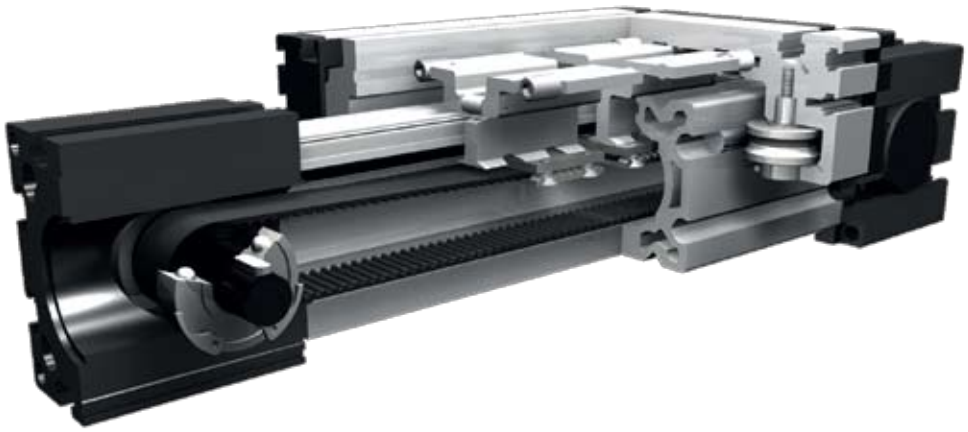

Function:
This linear unit consists of an aluminium square profile with integrated, hardened steel guide rods. The carriage, which has internal linear ball bearings that can be adjusted free of play, is driven along the guide rods by a timing belt. Toothed pulley has maintenance-free ball bearings. Belt tension can be readjusted by a simple screw adjustment device in the carriage. This device can also be used for symmetrical adjustment of two or more linear units running parallel.
This linear unit is suitable for application in clean rooms of clean-room classification 1.000 (corresponding to US Fed. Standard 209 E).

Fitting position: As required. Max. length 3.000 mm without joints.
Carriage mounting: By T-slots.
Unit mounting: By tapped holes or tapped holes in the bearing block, mounting sets.
Belt type: HTD with steel reinforcement, no backlash when changing direction, repeatability ± 0,1 mm.

Forces and torques

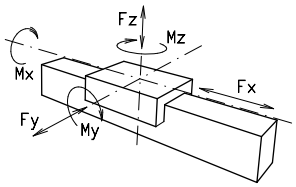

Size	ELHZ 60		ELHZ 60 S		ELHZ 80		ELHZ 80 S		ELHZ 100		ELHZ 125	
Forces/Torques	static	dyna-mic	static	dyna-mic	static	dyna-mic	static	dyna-mic	static	dyna-mic	static	dynamic
F_x (N)	700	580	700	580	1000	840	1000	840	3100	2600	5000	4950
F_y (N)	3000	2000	4100	3100	3000	2000	4600	3600	8000	6500	12000	9000
F_z (N)	1700	1100	2160	1600	1700	1100	3000	1800	3600	2200	6000	4500
M_x (Nm)	67	43	88	65	90	55	170	140	300	230	600	450
M_y (Nm)	90	70	190	140	110	80	270	230	400	270	750	600
M_z (Nm)	120	100	230	170	150	120	300	220	750	500	1350	1150
All forces and torques relate to the following: existing values / table values $\frac{Fy}{Fy_{dyn}} + \frac{Fz}{Fz_{dyn}} + \frac{Mx}{Mx_{dyn}} + \frac{My}{My_{dyn}} + \frac{Mz}{Mz_{dyn}} \leq 1$												
No-load torque												
Nm	0,5		0,5		0,8		1,2		1,2		1,6	
Speed												
(m/sec) max	3		4		4		4		5		6	
Tensile force												
permanent (N)	700		700		1000		1000		3100		5000	
0,2 sec (N)	800		800		1150		1150		3400		5450	
Geometrical moments of inertia of aluminium profile												
I_x mm^4	$6{,}79 \times 10^5$		$6{,}79 \times 10^5$		$18{,}99 \times 10^5$		$18{,}99 \times 10^5$		$44{,}4 \times 10^5$		$101{,}5 \times 10^5$	
I_y mm^4	$6{,}97 \times 10^5$		$6{,}97 \times 10^5$		$18{,}97 \times 10^5$		$18{,}97 \times 10^5$		$44{,}8 \times 10^5$		$101{,}5 \times 10^5$	
E-Modulus N/mm^2	70000		70000		70000		70000		70000		70000	

Formula: ELHZ
Driving torque:

$$M_a = \frac{F*P*S_i}{2000*\pi} + M_{leer}$$

$$P_a = \frac{M_a*n}{9550}$$

F	= force	(N)
P	= pulley action perimeter	(mm)
S_i	= safety factor 1,2 ... 2	
M_{leer}	= no-load torque	(Nm)
n	= rpm pulley	(min^{-1})
M_a	= driving torque	(Nm)
P_a	= motor power	(KW)

$$f = \frac{F*L^3}{E*I*192}$$

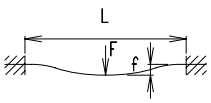

f	= deflection	(mm)
F	= load	(N)
L	= free length	(mm)
E	= elastic modulus 70000	(N/mm^2)
I	= second moment of area	(mm^4)

nookindustries.com toll-free 1 (800) 321-7800
www.nookindustries.ru (499) 703 35 98 sell@nookindustries.ru

Modular Linear Actuator
ELHZ 60, 60S, 80, 80S, 100, 125

Dimensions (mm)

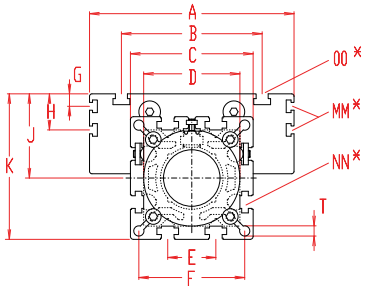

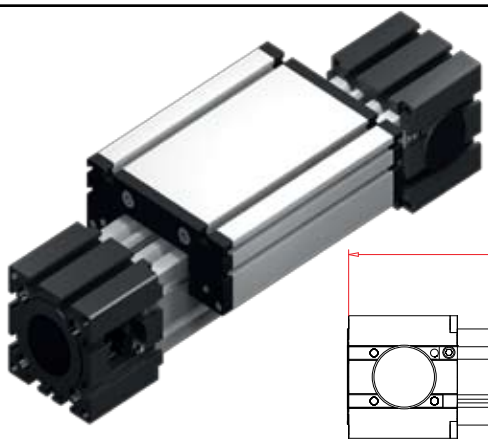

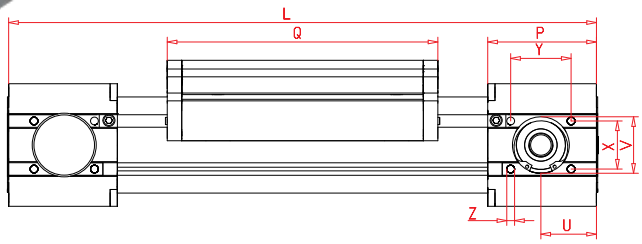

Increasing the carriage length will increase the basic length by the same amount.

*For slide nuts refer to chapter 2.2 page 2

Size	Basic length L	A	B	C	D	E	F	G	H	J	K	MM for	NN for	OO for	P	Q	T	U	V	W¹	X	Y	Z	Basic weight	Weight per 100 mm
ELHZ 60	290	144	96	82	62x1	30	69	--	-	49	90	-	M 8	M 8	59	168	8,5	23	37	14	30	36	M 6	4,8 kg	0,62 kg
ELHZ 60S	315	170	108	82	62x1	30	69	--	-	49	94	-	M 8	M 8	59	194	8,5	23	37	14	30	36	M 6	5,8 kg	0,62 kg
ELHZ 80	375	170	117	102	80x1	40	88	10	30	70	121	M 6	M10	M10	90	194	8,5	38	47	18	40	50	M 8	10,0 kg	1,00 kg
ELHZ 80S	395	190	126	102	80x1	40	88	12,5	30	71	122	M 6	M10	M 8	90	214	8,5	38	47	18	40	50	M 8	11,0 kg	1,00 kg
ELHZ 100	530	230	155	130	110x1	50	112	-	29	89	154	M10	M10	M10	110	300	10,5	45	68	19	50	64	M10	24,0 kg	1,60 kg
ELHZ 125	630	295	200	165	130x2	60	142	-	30	107,5	190	M10	M10	M12	132	365	13,0	58	90	35	60	85	M10	37,0 kg	2,10 kg

W¹ = standard shaft

Choice of guide body profile:

0 **(0)** Standard **(1)** stainless guide rods **(2)** stainless guide rods and screws **(3)** stainless guide rods, rollers and screws

Choice of carriages:

0 **(0)**

(1)

Size	Version 1	
	Q	L
60	184	306
60S	214	336
80	210	391
80S	234	415
100	316	546
125	389	649

Selection of shaft mounting:

0

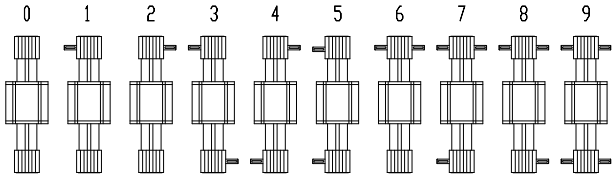

The standard version 0 is supplied with 4 flush mounted shafts.

Belt table

Code No.		Size	Belt	mm/rev.	Number of teeth
0	**4**	60 (S)	5M25	80	16
0	**4**	80 (S)	5M25	110	22
0	**9**	100	8M50	144	18
0	**9**	125	8M50	192	24

Shaft dimensions

Size	Shaft ø h6 x length	Key
60 (S)	14 x 35	5x5x28
80 (S)	18 x 45	6x6x40
100	22 x 45	6x6x40
125	30 x 55	8x7x40

Basic Length + Stroke + Overtravel** = total length
**Minimum 25mm on each end

ELHZ	60	0	0	0	0	0	4	1	01500
	Pos.	1	2	3	4	5	6	7	

For combination kits and connecting elements refer to chapter 2.2

Sample ordering code:
ELHZ 60, with standard body profile, standard carriage and 4 flush mounted shafts, 1210 mm stroke.

Modular Linear Actuator
ELVZ 60, 60S, 80, 80S, 100, 125

Internal Belt Drive **Specifications**

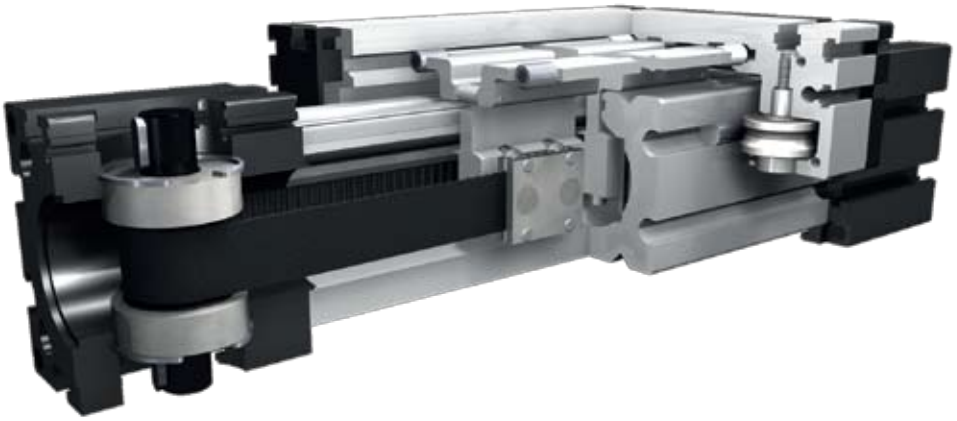

Function:
This linear unit consists of an aluminium square profile with integrated, hardened steel guide rods. The carriage, which has internal linear ball bearings that can be adjusted free of play, is driven along the guide rods by a toothed belt. Toothed pulley has maintenance-free ball bearings. Belt tension can be readjusted by a simple screw adjustment device in the carriage. This device can also be used for symmetrical adjustment of two or more linear units running parallel.
This linear unit is suitable for application in clean rooms of clean-room classification 1.000 (corresponding to US Fed. Standard 209 E).

Fitting position: As required. Max. length 3.000 mm without joints.
Carriage mounting: By T-slots.
Unit mounting: By tapped holes or tapped holes in the bearing block, mounting sets.
Belt type: HTD with steel reinforcement, no backlash when changing direction, repeatability ± 0,1 mm.

Forces and torques

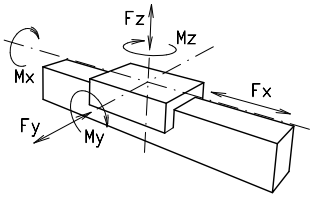

Size	ELVZ 60		ELVZ 60 S		ELVZ 80		ELVZ 80 S		ELVZ 100		ELVZ 125	
Forces/Torques	static	dyna-mic	static	dyna-mic	static	dyna-mic	static	dyna-mic	static	dyna-mic	static	dyna-mic
F_x (N)	700	580	700	580	1000	840	1000	840	3100	2600	5000	4950
F_y (N)	3000	2000	4100	3100	3000	2000	4600	3600	8000	6500	12000	9000
F_z (N)	1700	1100	2160	1600	1700	1100	3000	1800	3600	2200	6000	4500
M_x (Nm)	67	43	88	65	90	55	170	140	300	230	600	450
M_y (Nm)	90	70	190	140	110	80	270	230	400	270	750	600
M_z (Nm)	120	100	230	170	150	120	300	220	750	500	1350	1150

All forces and torques relate to the following:
existing values / table values

$$\frac{Fy}{Fy_{dyn}} + \frac{Fz}{Fz_{dyn}} + \frac{Mx}{Mx_{dyn}} + \frac{My}{My_{dyn}} + \frac{Mz}{Mz_{dyn}} \leq 1$$

No-load torque						
Nm	0,5	0,5	0,8	1,2	1,2	1,6
Speed						
(m/sec) max	3	4	4	4	5	6
Tensile force						
permanent (N)	700	700	1000	1000	3100	5000
0,2 sec (N)	800	800	1150	1150	3400	5450
Geometrical moments of inertia of aluminium profile						
I_x mm^4	$6{,}79 \times 10^5$	$6{,}79 \times 10^5$	$18{,}99 \times 10^5$	$18{,}99 \times 10^5$	$44{,}4 \times 10^5$	$101{,}5 \times 10^5$
I_y mm^4	$6{,}97 \times 10^5$	$6{,}97 \times 10^5$	$18{,}97 \times 10^5$	$18{,}97 \times 10^5$	$44{,}8 \times 10^5$	$101{,}5 \times 10^5$
E-Modulus N/mm^2	70000	70000	70000	70000	70000	70000

Formula: ELVZ
Driving torque:

$$M_a = \frac{F*P*S_i}{2000*\pi} + M_{leer}$$

$$P_a = \frac{M_a*n}{9550}$$

F	= force	(N)
P	= pulley action perimeter	(mm)
S_i	= safety factor 1,2 ... 2	
M_{leer}	= no-load torque	(Nm)
n	= rpm pulley	(min^{-1})
M_a	= driving torque	(Nm)
P_a	= motor power	(KW)

$$f = \frac{F*L^3}{E*I*192}$$

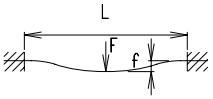

f	= deflection	(mm)
F	= load	(N)
L	= free length	(mm)
E	= elastic modulus 70000	(N/mm^2)
I	= second moment of area	(mm^4)

nookindustries.com toll-free 1 (800) 321-7800
www.nookindustries.ru (499) 703 35 98 sell@nookindustries.ru

Modular Linear Actuator
ELVZ 60, 60S, 80, 80S, 100, 125

Dimensions (mm)

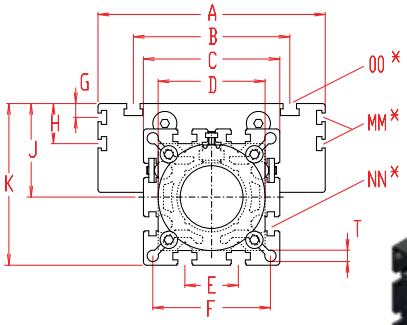

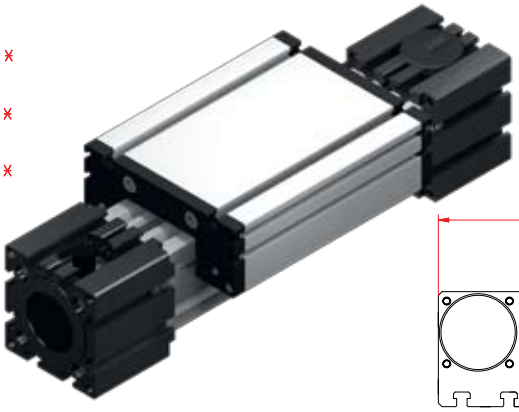

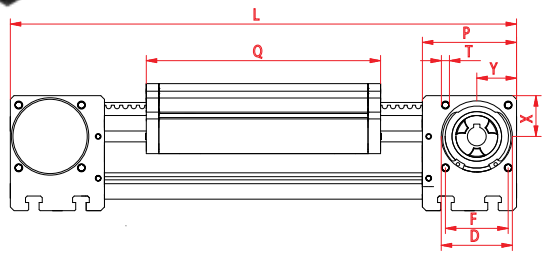

Increasing the carriage length will increase the basic length by the same amount

*For slide nuts refer to chapter 2.2 page 2

Size	Basic length L	A	B	C	D	E	F	G	H	J	K	MM for	NN for	OO for	P	Q	T	U	V	W¹	X	Y	Z	Basic weight	Weight per 100 mm
ELVZ 60	290	144	96	82	62x1	30	69	--	-	49	90	-	M 8	M 8	59	168	8,5	23	37	14	30	36	M 6	4,8 kg	0,62 kg
ELVZ 60S	315	170	108	82	62x1	30	69	--	-	49	94	-	M 8	M 8	59	194	8,5	23	37	14	30	36	M 6	5,8 kg	0,62 kg
ELVZ 80	375	170	117	102	80x1	40	88	10	30	70	121	M 6	M10	M10	90	194	8,5	38	47	18	40	50	M 8	10,0 kg	1,00 kg
ELVZ 80S	395	190	126	102	80x1	40	88	12,5	30	71	122	M 6	M10	M 8	90	214	8,5	38	47	18	40	50	M 8	11,0 kg	1,00 kg
ELVZ 100	530	230	155	130	110x1	50	112	-	29	89	154	M10	M10	M10	110	300	10,5	45	68	19	50	64	M10	24,0 kg	1,60 kg
ELVZ 125	630	295	200	165	130x2	60	142	-	30	107,5	190	M10	M10	M12	132	365	13	58	90	35	60	85	M10	37,0 kg	2,10 kg

W¹ = standard shaft

1 **(1)** Belt connection right 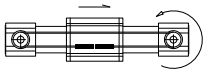 **(2)** Belt connection left 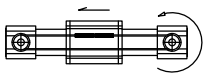

Choice of guide body profile:

0 **(0)** Standard **(1)** stainless guide rods **(2)** stainless guide rods and screws **(3)** stainless guide rods, rollers and screws

Choice of carriages:

0 **(0)** **(1)**

Size	Version 1	
	Q	L
60	184	306
60S	214	336
80	210	391
80S	234	415
100	316	546
125	389	649

Selection of shaft mounting:

0

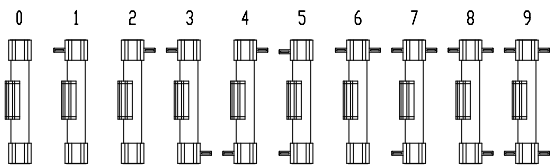

The standard version 0 is supplied with 4 flush mounted shafts.

Belt table

Code No.		Size	Belt	mm/rev.	Number of teeth
0	**4**	60 (S)	5M25	80	16
0	**4**	80 (S)	5M25	110	22
0	**9**	100	8M50	144	18
0	**9**	125	8M50	192	24

Shaft dimensions

Size	Shaft ø h6 x length	Key
60 (S)	14 x 35	5x5x28
80 (S)	18 x 45	6x6x40
100	22 x 45	6x6x40
125	30 x 55	8x7x40

Basic Length + Stroke + Overtravel** = total length
**Minimum 25mm on each end

ELVZ	60	1	0	0	0	0	4	1	01500
	Pos.	1	2	3	4	5	6	7	

For combination kits and connecting elements refer to chapter 2.2

Sample ordering code:
ELVZ 60 with belt connection right, standard body profile, standard carriage and 4 flush mounted shafts, 1210 mm stroke

Modular Linear Actuator
ELVZ 60, 60S, 80, 80S, 100, 125

Internal Belt Drive With Two Carriages Moving In Opposite Directions

Dimensions (mm)

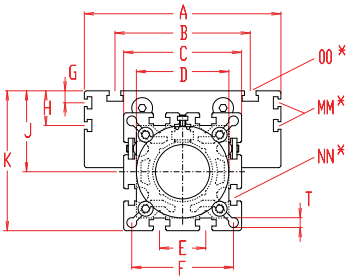

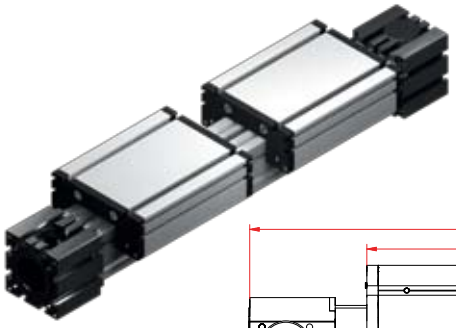

Increasing the carriage length will increase the basic length by the same amount

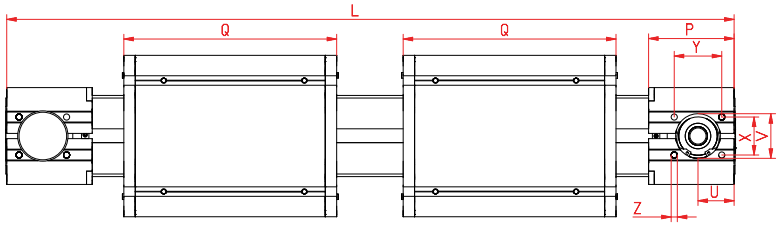

*For slide nuts refer to chapter 2.2 page 2

Size	Basic length L	A	B	C	D	E	F	G	H	J	K	MM for	NN for	OO for	P	Q	T	U	V	W¹	X	Y	Z	Basic weight	Weight per 100 mm
ELVZ 60	460	144	96	82	62x1	30	69	--	--	49	90	--	M 8	M 8	59	168	8,5	24	37	14	30	36	M 6	6,5 kg	0,62 kg
ELVZ 60S	510	170	108	82	62x1	30	69	--	--	49	94	--	M 8	M 8	59	194	8,5	24	37	14	30	36	M 6	8,5 kg	0,62 kg
ELVZ 80	570	170	117	102	80x1	40	88	10	30	70	121	M 6	M10	M10	90	194	8,5	38	47	18	40	50	M 8	13,0 kg	1,00 kg
ELVZ 80S	610	190	123	102	80x1	40	88	12,5	30	71	122	M 6	M10	M 8	90	214	8,5	38	47	18	40	50	M 8	15,0 kg	1,00 kg
ELVZ 100	830	230	155	130	110x1	50	112	--	29	89	154	M10	M10	M10	110	300	10,5	45	68	19	50	64	M10	31,0 kg	1,60 kg
ELVZ 125	990	295	200	165	130x2	60	142	--	30	107,5	190	M10	M10	M12	132	365	13	58	90	35	60	64	M10	50,5 kg	2,10 kg

W¹ = standard shaft

7 **(7)** Belt connection right 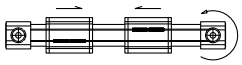 **(8)** Belt connection left

0 **Choice of guide body profile:**
(0) Standard **(1)** stainless guide rods **(2)** stainless guide rods and screws **(3)** stainless guide rods, rollers and screws

Choice of carriages:

0 **(0)** **(1)**

Size	Version 1	
	Q	L
60	184	492
60S	214	542
80	210	602
80S	234	650
100	316	862
125	389	1038

Selection of shaft mounting:

0

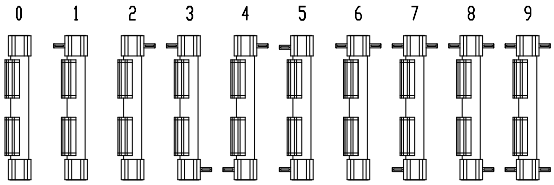

The standard version 0 is supplied with 4 flush mounted shafts.

Belt table

Code No.		Size	Belt	mm/rev.	Number of teeth
0	**4**	60 (S)	5M25	80	16
0	**4**	80 (S)	5M25	110	22
0	**9**	100	8M50	144	18
0	**9**	125	8M50	192	24

Shaft dimensions

Size	Shaft ø h6 x length	Key
60 (S)	14 x 35	5x5x28
80 (S)	18 x 45	6x6x40
100	22 x 45	6x6x40
125	30 x 55	8x7x40

Basic Length + Stroke + Overtravel** = total length
**Minimum 25mm on each end

ELVZ	60	7	0	0	0	0	4	1	01500
	Pos.	1	2	3	4	5	6	7	

For combination kits and connecting elements refer to chapter 2.2

Sample ordering code:
ELVZ 60 right-/left-hand with belt connection right, standard body profile, standard carriage and 4 flush mounted shafts, 1040 mm stroke

nookindustries.com toll-free 1 (800) 321-7800
www.nookindustries.ru (499) 703 35 98 sell@nookindustries.ru

Possible Mounting Styles

ELHZ, ELVZ Belt Drive Units

For motion of two parallel running units you have to take a left- and right- hand version.

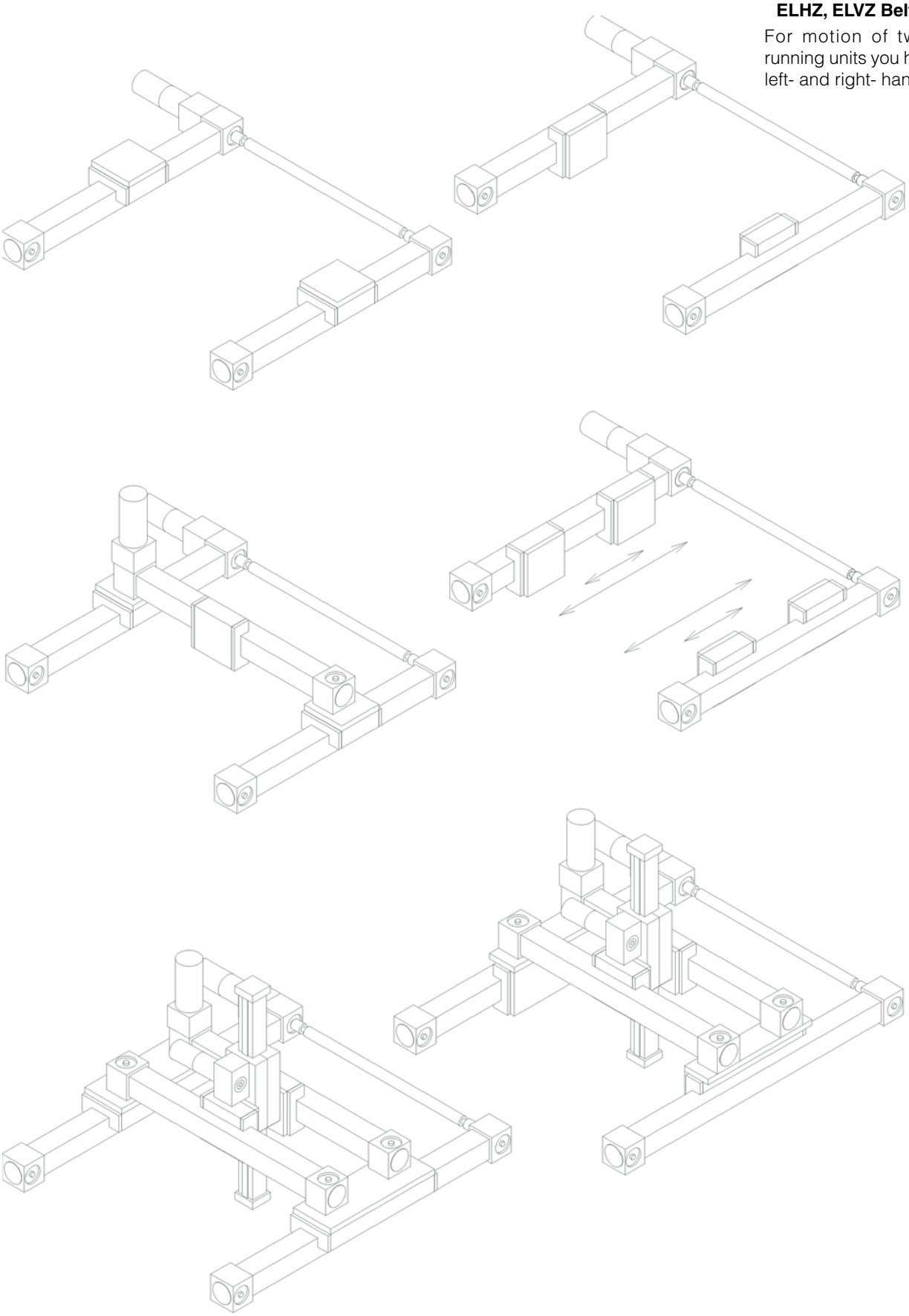

Modular Linear Actuator
ELFZ 60S, 80S, 100, 125

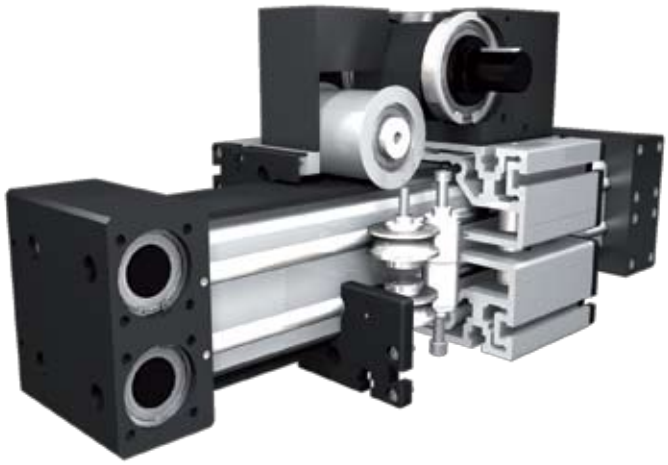

Function:
This special lifting unit consists of an aluminium square profile with hardened steel guide rods. The carriages, which have internal linear ball bearings that can be adjusted free of play, are driven along the guide rods by a timing belt. The rotating timing belt pulleys have maintenance-free ball bearings. One rotation of the drive pulley complies with 1/2 linear circumference of the drive pulley. Belt tension can be readjusted by a simple tensioning device in one of the carriages. This device can also be used for symmetrical adjustment of two or more linear units running parallel.

Fitting position: As required. Max. length without joints 6.000 mm.
Carriage mounting: By T-slots.
Unit mounting: By T-slots or tapped holes in the bearing blocks, or mounting sets.
Belt type: HTD with steel reinforcement, no backlash when changing direction, repeatability ± 0,1 mm.

Forces and torques

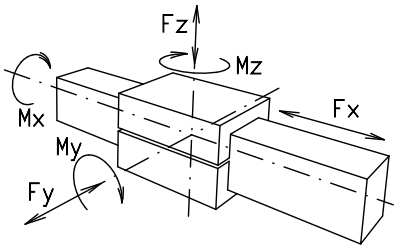

Size	ELFZ 60S		ELFZ 80S		ELFZ 100		ELFZ 125	
Forces/Torques	static	dynamic	static	dynamic	static	dynamic	static	dynamic
F_x (N)	3600	3200	6200	5400	8700	7600	12000	10400
F_y (N)	8200	6200	9200	7200	16000	13000	24000	18000
F_z (N)	4320	3200	6000	3600	7200	4400	12000	9000
M_x (Nm)	176	130	340	280	600	460	1200	900
M_y (Nm)	380	280	540	460	800	540	1500	1200
M_z (Nm)	460	340	600	440	1500	1000	2700	2300
All forces and torques relate to the following: existing values / table values $\frac{Fy}{Fy_{dyn}} + \frac{Fz}{Fz_{dyn}} + \frac{Mx}{Mx_{dyn}} + \frac{My}{My_{dyn}} + \frac{Mz}{Mz_{dyn}} \leq 1$								
No-load torque								
Nm	1,3		1,5		2		2	
Speed								
(m/sec) max	4		4		4		4	
Drive torque								
max (Nm)	48		120		386		500	
Geometrical moments of inertia of aluminium profile								
I_x mm^4	$6{,}79 \times 10^5$		$1{,}89 \times 10^6$		$4{,}44 \times 10^6$		$10{,}15 \times 10^6$	
I_y mm^4	$6{,}9710^5$		$1{,}8910^6$		$4{,}48 \times 10^6$		$10{,}15 \times 10^6$	
E-Modulus N/mm^2	70000		70000		70000		70000	

Formula: ELFZ
Driving torque:

$$M_a = \frac{F*P*S_i}{2000*\ \pi*2} + M_{leer}$$

$$P_a = \frac{M_a*n}{9550}$$

F	= force	(N)
P	= pulley action perimeter	(mm)
S_i	= safety factor 1,2 ... 2	
M_{leer}	= no-load torque	(Nm)
n	= rpm pulley	(min^{-1})
M_a	= driving torque	(Nm)
P_a	= motor power	(KW)

$$f = \frac{F*L^3}{E*I*192}$$

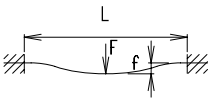

f	= deflection	(mm)
F	= load	(N)
L	= free length	(mm)
E	= elastic modulus 70000	(N/mm^2)
I	= second moment of area	(mm^4)

nookindustries.com toll-free 1 (800) 321-7800
www.nookindustries.ru (499) 703 35 98 sell@nookindustries.ru

Modular Linear Actuator
ELFZ 60S, 80S, 100, 125

Dimensions (mm)

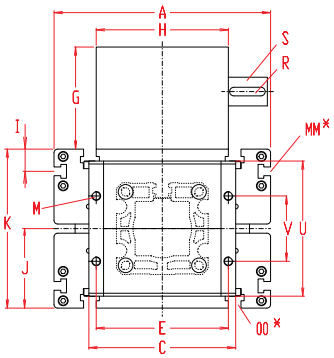

Increasing the carriage length will increase the basic length by the same amount.

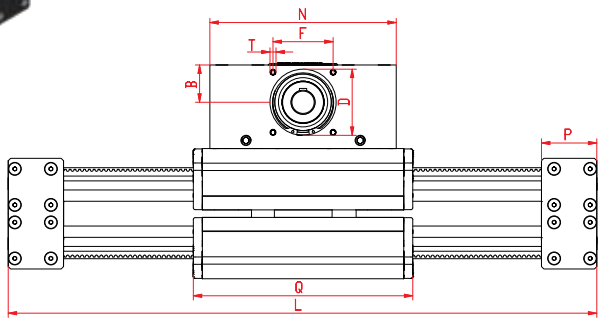

*For slide nuts refer to chapter 2.2 page 2

Size	Basic length L	A	B	C	D	E	F	G	H	I	J	K	MM for	M	N	OO for	P	Q	R	S	T	U	V	Basic weight	Weight per 100 mm
ELFZ 60S	410	170	38	108	68	97	60	102	100	-	53	106	-	M8	180	M8	97	214	6x6x40	18x45	M8	97	60	23,1 kg	0,64 kg
ELFZ 80S	580	190	60	126	90	134	80	139	130	12,5	71	142	M6	M10	270	M 8	130	315	8x7x40	30x45	M10	130	70	51 kg	1,20 kg
ELFZ 100	530	230	62	170	110	150	100	143	160	29	89	178	M10	M10	310	M10	77	365	12x8x50	40x55	M10	150	80	69 kg	1,80 kg
ELFZ 125	560	295	62	200	110	180	100	139	180	30	107,5	215	M10	M12	310	M12	92	365	12x8x50	40x55	M10	186	89	87,5 kg	2,70 kg

Choice of guide body profile:

0

(0) Standard **(1)** stainless guide rods **(2)** stainless guide rods and screws **(3)** stainless guide rods, rollers and screws

Choice of carriages:

0

(0)

(1)

Size	Version 1	
	Q	L
60S	380	580
80S	489	750
100	575	740
125	640	830

Selection of shaft mounting:

1

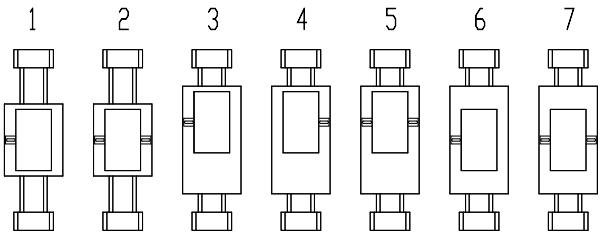

Belt table

Code No.		Size	Belt	mm/rev. ≈linear	Number of teeth
0	3	60S	8M30	192 ≈ 96	24
0	4	80S	8M50	256 ≈128	32
0	7	100	8M70	304 ≈152	38
0	9	125	8M100	304 ≈152	38

Shaft dimensions

Size	Shaft ø h6 x length	Key
60S	18 x 45	6x6x40
80S	30 x 45	8x7x40
100	40 x 55	12x8x50
125	40 x 55	12x8x50

Basic Length + Stroke + Overtravel** = total length
**Minimum 25mm on each end

ELFZ	125	0	0	0	1	0	9	1	01500
	Pos.	1	2	3	4	5	6	7	

Sample ordering code:
ELFZ 125 with standard body profile, standard carriage, shaft Pos. 1, 940 mm stroke

For combination kits and connecting elements refer to chapter 2.2

Modular Linear Actuator
"Explosion Proof" ELFZ Ex 60S, 80S, 100, 125

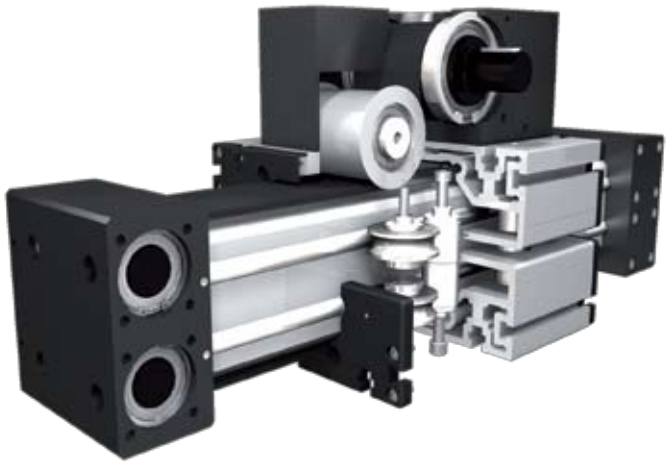

ATEX 95
Ex II 2G EEx c II B T4
Ex II 3D EEx c T1 25 ° C

Function:
Like ELFZ. The Modular Linear Actuator is suitable for use according to the intended purpose in potentially explosive areas (see ATEX 95 marking). An operating manual is included in the scope of delivery. The system is certified for the following areas:
ATEX 95 II 2G EEx c IIB T4:
All application areas except for underground mining. Gas atmosphere category 2, explosion protection category: protection due to secure construction (design security). Equipment group IIB. Temperature class T4=135°C
ATEX 95 II 3D T125°C:
All application areas except for underground mining. Dust atmosphere category 3. Maximum permissible surface temperature: 125°C.

Fitting position: As required. Max. length without joints 3.000 mm.
Carriage mounting: By T-slots.
Unit mounting: By T-slots or tapped holes in the bearing blocks, or mounting sets.
Belt type: HTD with steel reinforcement, no backlash when changing direction, repeatability ± 0,1 mm.

Forces and torques

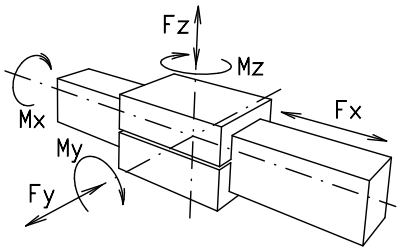

Size	ELFZex 60S		ELFZex 80S		ELFZex 100		ELFZex 125	
Forces/Torques	static	dynamic	static	dynamic	static	dynamic	static	dynamic
F_x (N)	1800	1550	3000	2600	4200	3650	6000	5200
F_y (N)	3820	3056	4438	3550	6200	4960	9960	7968
F_z (N)	1870	1496	1052	842	1292	1043	2190	1752
M_x (Nm)	104	82	134	108	202	162	440	352
M_y (Nm)	132	106	154	140	272	218	560	448
M_z (Nm)	274	220	364	292	652	520	1272	1018
All forces and torques relate to the following: existing values / table values $\frac{Fy}{Fy_{dyn}} + \frac{Fz}{Fz_{dyn}} + \frac{Mx}{Mx_{dyn}} + \frac{My}{My_{dyn}} + \frac{Mz}{Mz_{dyn}} \leq 1$								
No-load torque								
Nm	1,2		1,5		2		2	
Speed								
(m/sec) max	1		1		1		1	
Drive torque								
max (Nm)	27		62		101		145	
Geometrical moments of inertia of aluminium profile								
I_x mm^4	$6{,}79 \times 10^5$		$1{,}89 \times 10^6$		$4{,}44 \times 10^6$		$10{,}15 \times 10^6$	
I_y mm^4	$6{,}97 \times 10^5$		$1{,}89 \times 10^6$		$4{,}48 \times 10^6$		$10{,}15 \times 10^6$	
E-Modulus N/mm^2	70000		70000		70000		70000	

Formula: ELFZ
Driving torque:

$$M_a = \frac{F*P*S_i}{2000*\ \pi*2} + M_{leer}$$

$$P_a = \frac{M_a*n}{9550}$$

F = force (N)
P = pulley action perimeter (mm)
S_i = safety factor 1,2 ... 2
M_{leer} = no-load torque (Nm)
n = rpm pulley (min^{-1})
M_a = driving torque (Nm)
P_a = motor power (KW)

$$f = \frac{F*L^3}{E*I*192}$$

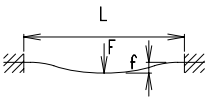

f = deflection (mm)
F = load (N)
L = free length (mm)
E = elastic modulus 70000 (N/mm^2)
I = second moment of area (mm^4)

nookindustries.com toll-free 1 (800) 321-7800
www.nookindustries.ru (499) 703 35 98 sell@nookindustries.ru

Modular Linear Actuator
"Explosion Proof" ELFZ Ex 60S, 80S, 100, 125

Dimensions (mm)

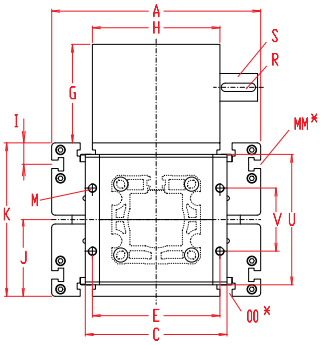

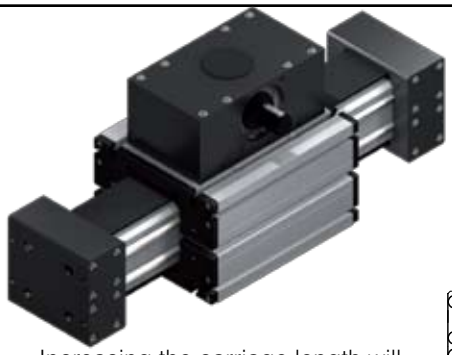

Increasing the carriage length will increase the basic length by the same amount.

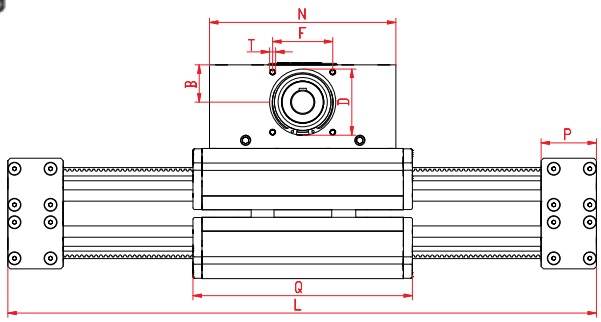

*For slide nuts refer to chapter 2.2 page 2

Size	Basic length L	A	B	C	D	E	F	G	H	I	J	K	MM for	M	N	OO for	P	Q	R	S	T	U	V	Basic weight	Weight per 100 mm
ELFZex 60S	430	170	38	108	68	97	60	102	100	-	53	106	-	M8	180	M8	97	214	6x6x40	18x45	M8	97	60	23,2 kg	0,64 kg
ELFZex 80S	600	190	60	126	90	134	80	139	130	12,5	71	142	M6	M10	270	M 8	130	315	8x7x40	30x45	M10	130	70	51 kg	1,20 kg
ELFZex 100	560	230	62	170	110	150	100	143	160	29	89	178	M10	M10	310	M10	77	365	12x8x50	40x55	M10	150	80	69 kg	1,80 kg
ELFZex 125	590	295	62	200	110	180	100	139	180	30	107,5	215	M10	M12	310	M12	92	365	12x8x50	40x55	M10	186	89	87,5 kg	2,70 kg

Choice of guide body profile:

0 **(0)** Standard **(1)** stainless guide rods **(2)** stainless guide rods and screws **(3)** stainless guide rods, rollers and screws

Choice of carriages:

0

(0)

(1)

Size	Version 1	
	Q	L
60S	380	600
80S	489	770
100	575	770
125	640	860

Selection of shaft mounting:

1

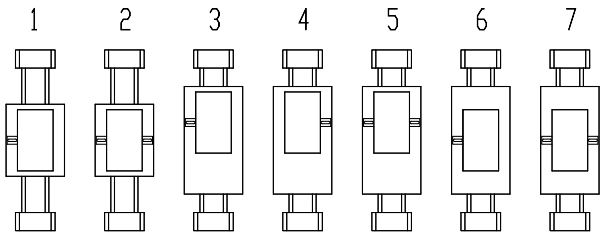

Belt table

Code No.		Size	Belt	mm/rev.	linear	Number of teeth
0	**3**	60S	8M30	192	≈96	24
0	**4**	80S	8M50	256	≈128	32
0	**7**	100	8M70	304	≈152	38
0	**9**	125	8M100	304	≈152	38

Shaft dimensions

Size	Shaft ø h6 x length	Key
60S	18 x 45	6x6x40
80S	30 x 45	8x7x40
100	40 x 55	12x8x50
125	40 x 55	12x8x50

Basic Length + Stroke + Overtravel** = total length
**Minimum 25mm on each end

ELFZex	125	0	0	0	1	0	9	1	01500
	Pos.	1	2	3	4	5	6	7	

For combination kits and connecting elements refer to chapter 2.2

Sample ordering code:
ELFZ 125 with standard body profile, standard carriage, shaft Pos. 1, 910 mm stroke

Modular Linear Actuator
ELZU 30, 40, 60, 60S, 80, 80S, 100

Surface Portal **Specifications**

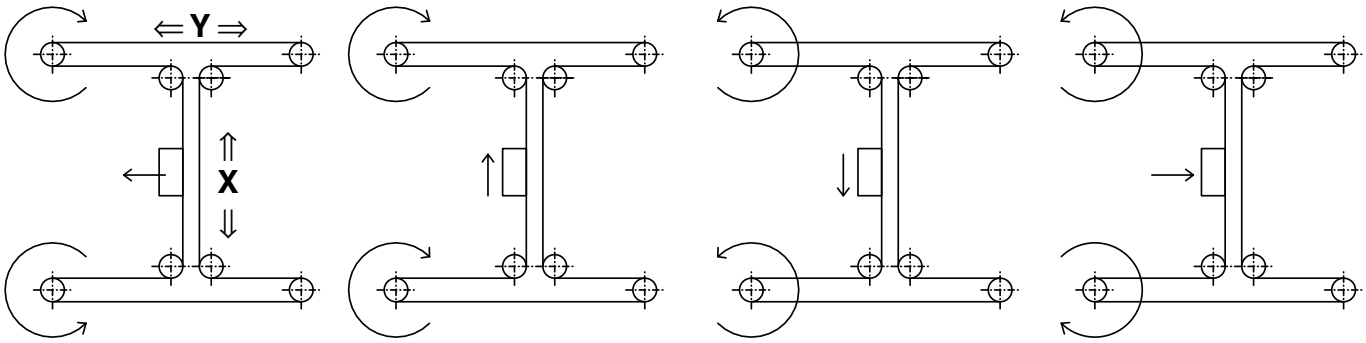

Function:
Surface portal, consisting of 2 Y-axes and 1 X-axis, driven by one rotating belt. This belt runs around different deflection pulleys. Positioning is achieved by two motors. The coordinate is diagonal to the deflection points of the Y-axis.
Advantage: Only small weights are moved, thus enabling high accelerations to be achieved.

Forces and torques

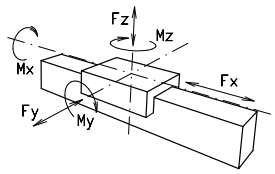

Fitting position: As required. Max. length and width 3.000 mm.
Carriage mounting: By T-slots.
Unit mounting: By T-slots or tapped holes in the bearing block, mounting sets.
Belt type: HTD with steel reinforcement, no backlash when changing direction, repeatability: ± 0,1 mm.

Size	ELZU 30		ELZU 40		ELZU 60		ELZU 60 S		ELZU 80		ELZU 80 S		ELZU 100	
Forces/Torques	static	dynamic	static	dynamic	static	dynamic	static	dynamic	static	dynamic	static	dynamic	static	dynamic
F_x (N)	200	180	390	350	894	800	894	800	1900	1800	1900	1800	4000	3800
F_y (N)	90	60	1200	700	3000	2000	4100	3100	3000	2000	4600	3600	8000	6500
F_z (N)	90	60	900	650	1700	1100	2160	1600	1700	1100	3000	1800	3600	2200
M_x (Nm)	10	5	25	20	67	43	88	65	90	55	170	140	300	230
M_y (Nm)	13	6	32	18	90	70	190	140	110	80	270	230	400	270
M_z (Nm)	14	7	35	25	120	100	230	170	150	120	300	220	750	500
All forces and torques relate to the following: existing values / table values $\frac{Fy}{Fy_{dyn}} + \frac{Fz}{Fz_{dyn}} + \frac{Mx}{Mx_{dyn}} + \frac{My}{My_{dyn}} + \frac{Mz}{Mz_{dyn}} \leq 1$														
No-load torqe														
Nm	0,2		0,6		1,2		1,2		1,8		1,8		2,6	
Speed														
(m/sec) max	2		4		5		5		6		6		8	
Tensile force														
permanent (N)	200		390		900		900		1900		1900		3600	
0,2 sec (N)	280		480		1000		1000		2090		2090		4000	
Geometrical moments of inertia of aluminium profile														
I_x mm^4	$4{,}09 \times 10^4$		$1{,}32 \times 10^5$		$6{,}79 \times 10^5$		$6{,}79 \times 10^5$		$18{,}99 \times 10^5$		$18{,}99 \times 10^5$		$44{,}4 \times 10^5$	
I_y mm^4	$4{,}00 \times 10^4$		$1{,}34 \times 10^5$		$6{,}97 \times 10^5$		$6{,}97 \times 10^5$		$18{,}97 \times 10^5$		$18{,}97 \times 10^5$		$44{,}8 \times 10^5$	
E-Modulus N/mm^2	70000		70000		70000		70000		70000		70000		70000	

Formula: ELZU
Driving torque:

$$M_a = \frac{F*P*S_i}{2000*\pi} + M_{leer}$$

$$P_a = \frac{M_a*n}{9550}$$

F = force (N)
P = pulley action perimeter (mm)
S_i = safety factor 1,2 ... 2
M_{leer} = no-load torque (Nm)
n = rpm pulley (min^{-1})
M_a = driving torque (Nm)
P_a = motor power (KW)

$$f = \frac{F*L^3}{E*I*192}$$

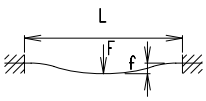

f = deflection (mm)
F = load (N)
L = free length (mm)
E = elastic modulus 70000 (N/mm^2)
I = second moment of area (mm^4)

nookindustries.com toll-free 1 (800) 321-7800
www.nookindustries.ru (499) 703 35 98 sell@nookindustries.ru

Modular Linear Actuator
ELZU 30, 40, 60, 60S, 80, 80S, 100

Dimensions (mm)

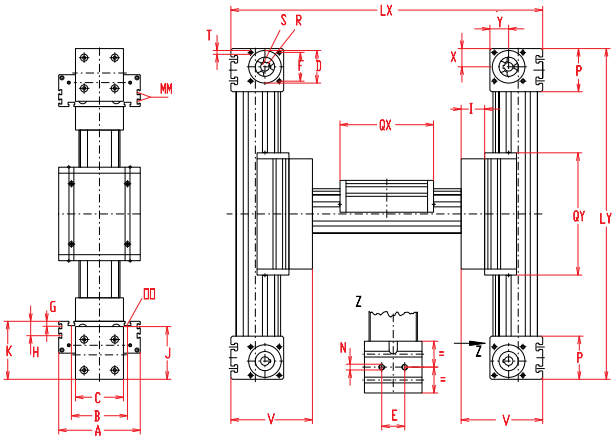

*For slide nuts refer to chapter 2.2 page 2

Size	Basic length Lx	Basic length Ly	A	B	C	D	E	F	G	H	I	J	K	MM for	N for	OO for	P	Qx	Qy	T	V	X	Y	Basic weight	Weight per 100 mm
ELZU 30	240	210	70	56	42	28	13	25	-	-	27	44	47	-	M 5	M 6	36	82	126	M 5	74	16	16	6,3 kg	0,13 kg
ELZU 40	304	250	100	66	58	37	18	32	-	-	26	58	64	-	M 6	M 6	49	124	149	M 5	90	20,5	20,5	6,8 kg	0,24 kg
ELZU 60	426	330	144	96	80	47	30	42	-	-	33	82	90	-	M 8	M 8	59	168	210	M 6	123	27	26	14,7 kg	0,62 kg
ELZU 60S	450	330	170	108	80	47	30	42	-	-	33	82	94	-	M 8	M 8	59	194	210	M 6	127	27	26	17,7 kg	0,62 kg
ELZU 80	535	435	170	117	100	68	40	60	10	30	44	110	121	M 6	M10	M10	90	195	245	M 8	165	39	38	31,0 kg	1,00 kg
ELZU 80S	555	455	190	126	100	68	40	60	12,5	30	44	110	122	M6	M10	M 8	90	214	265	M 8	167	39	38	32,0 kg	1,00 k,g
ELZU 100	758	590	230	155	130	90	50	80	-	29	69	135	154	M10	M12	M10	110	300	360	M10	223	50	50	47,3 kg	1,40 kg

Choice of guide body profile:

0

(0) Standard **(1)** stainless guide rods **(2)** stainless guide rods and screws **(3)** stainless guide rods, rollers and screws

Choice of carriages:

0

(0)

(1)

(2)

Size	Version 1 Qx	Version 1 Lx	Version 1 Qy	Version 1 Ly	Version 2 Qx	Version 2 Lx	Version 2 Qy	Version 2 Ly
30	94	252	126	210	94	252	138	222
40	138	320	147	250	138	320	163	266
60	184	442	210	330	184	442	226	346
60S	214	468	210	330	214	468	226	350
80	210	551	244	435	210	551	260	451
80S	234	575	264	455	234	575	284	475
100	316	774	360	590	316	774	376	606

Selection of shaft mounting:

0

(0)

(1)

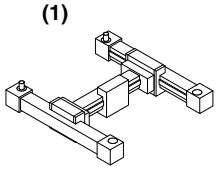

(2)

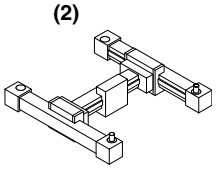

The standard version is supplied without shaft. A shaft can be retrofitted by inserting it into the pulley bore and securing it with 2 locking rings.

Belt table

Code No.		Size	Belt	mm/rev.	Number of teeth
0	1	30	3M12	75	25
0	3	40	5M15	100	20
0	4	60 (S)	5M25	130	26
0	7	80 (S)	8M30	192	24
0	9	100	8M50	256	32

Shaft dimensions

Size	Shaft ø h6 x length	Key
30	6 x 15	2x2x12
40	10 x 27	3x3x25
60 (S)	14 x 35	5x5x28
80 (S)	18 x 45	6x6x40
100	22 x 45	6x6x40

X-Axis Basic Length + Stroke + Overtravel** = total length **Minimum 25mm on each end

ELZU	60	7	0	0	0	0	4	1	01500

Y-Axes Basic Length + Stroke + Overtravel** = total length **Minimum 25mm on each end

ELZU	60	8	0	0	0	0	4	1	00700
	Pos.	1	2	3	4	5	6	7	

For combination kits and connecting elements refer to chapter 2.2

Sample ordering code:
ELZU 60 with standard body profile, standard carriage, coupling claw on one side, stroke X = 1074 / Y = 370 mm

Modular Linear Actuator
MLZ 60, 60S, 80, 80S, 100

Belt Drive **Specifications**

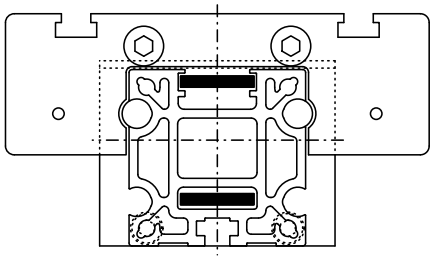

Function:
This linear unit consists of an aluminium square profile with integrated, hardened steel guide rods. The carriage, which has internal linear ball bearings, that can be adjusted free of play, is driven along the guide rods by a timing belt. The advantage of this system is that the belt is guided within the profile, ensuring that the belt is always tight and thus enabling the system to be operated e.g. when lying on its side. The pulleys have maintenance-free ball bearings. Belt tension can be readjusted by a simple screw adjustment device in the carriage. This device can also be used for symmetrical adjustment of two or more linear units running parallel.

Fitting position: As required, max. length 6.000 mm without joints.
Carriage mounting: By T-slots.
Unit mounting: By T-slots or tapped holes in the bearing block, mounting sets.
Belt type: HTD with steel reinforcement, no backlash when changing direction, repeatability: ± 0,1 mm.

Forces and torques

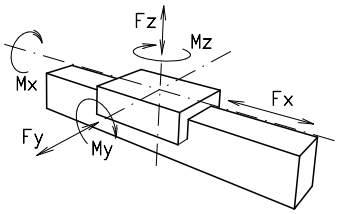

Size	MLZ 60		MLZ 60 S		MLZ 80		MLZ 80 S		MLZ 100	
Forces/Torques	static	dynamic	statisch	dynamic	static	dynamic	static	dynamic	static	dynamic
F_x (N)	894	800	894	800	1900	1800	1900	1800	4000	3800
F_y (N)	3000	2000	4100	3100	3000	2000	4600	3600	8000	6500
F_z (N)	1700	1100	2160	1600	1700	1100	3000	1800	3600	2200
M_x (Nm)	67	43	88	65	90	55	170	140	300	230
M_y (Nm)	90	70	190	140	110	80	270	230	400	270
M_z (Nm)	120	100	230	170	150	120	300	220	750	500

All forces and torques relate to the following:
existing values / table values: $\frac{Fy}{Fy_{dyn}} + \frac{Fz}{Fz_{dyn}} + \frac{Mx}{Mx_{dyn}} + \frac{My}{My_{dyn}} + \frac{Mz}{Mz_{dyn}} \leq 1$

No-load torque					
Nm	0,6	0,7	0,9	1,2	1,4
Speed					
(m/sec) max	5	7	6	8	10
Tensile force					
permanent (N)	900	900	1900	1900	4000
0,2 sec (N)	1000	1000	2090	2090	4300
Geometrical moments of inertia of aluminium profile					
I_x mm^4	$4{,}83 \times 10^5$	$4{,}83 \times 10^5$	$17{,}49 \times 10^5$	$17{,}49 \times 10^5$	$39{,}4 \times 10^5$
I_y mm^4	$5{,}03 \times 10^5$	$5{,}03 \times 10^5$	$18{,}02 \times 10^5$	$18{,}02 \times 10^5$	$43{,}5 \times 10^5$
E-Modulus N/mm^2	70000	70000	70000	70000	70000

Formula: MLZ
Driving torque:

$$M_a = \frac{F*P*S_i}{2000*\pi} + M_{leer}$$

$$P_a = \frac{M_a*n}{9550}$$

F = force (N)
P = pulley action perimeter (mm)
S_i = safety factor 1,2 ... 2
M_{leer} = no-load torque (Nm)
n = rpm pulley (min^{-1})
M_a = driving torque (Nm)
P_a = motor power (KW)

$$f = \frac{F*L^3}{E*I*192}$$

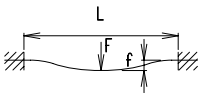

f = deflection (mm)
F = load (N)
L = free length (mm)
E = elastic modulus 70000 (N/mm^2)
I = second moment of area (mm^4)

nookindustries.com toll-free 1 (800) 321-7800
www.nookindustries.ru (499) 703 35 98 sell@nookindustries.ru

Modular Linear Actuator
MLZ 60, 60S, 80, 80S, 100

Dimensions (mm)

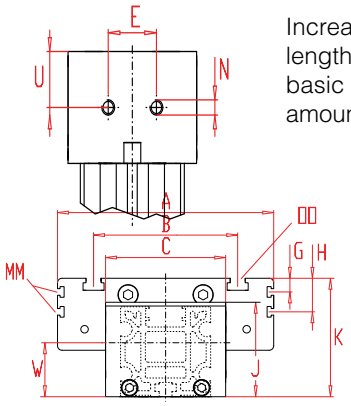

Increasing the carriage length will increase the basic length by the same amount.

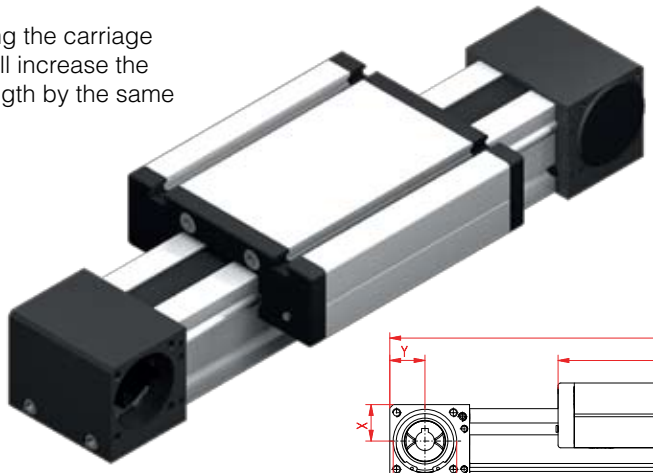

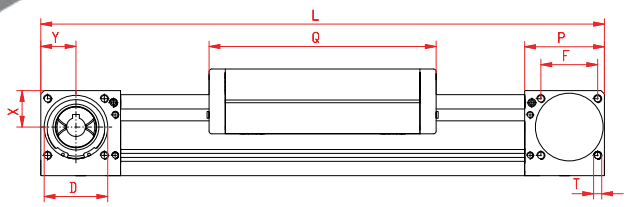

3.1

*For slide nuts refer to chapter 2.2 page 2

Size	Basic length L	A	B	C	D	E	F	G	H	J	K	MM for	N	OO for	P	Q	T	U	W	X	Y	Basic weight	Weight per 100 mm
MLZ 60	290	144	96	80	47	30	42	-	-	63	79	-	M 8	M 8	59	168	M 6	29,5	36	27	26	4,7 kg	0,6 kg
MLZ 60S	316	170	108	80	47	30	42	-	-	63	83	-	M 8	M 8	59	194	M 6	29,5	30	27	26	5,7 kg	0,6 kg
MLZ 80	375	170	117	100	68	40	60	10	30	93	110	M 6	M 10	M 10	90	194	M 8	47,5	40	45	40	9,6 kg	1,0 kg
MLZ 80 S	395	190	126	100	68	40	60	12,5	30	93	111	M 6	M 10	M 8	90	214	M 8	47,5	40	45	40	10,8 kg	1,0 kg
MLZ 100	530	230	155	130	90	110	80	-	29	120	139	M10	M 12	M10	110	300	M 10	55	50	49	50	22,5 kg	1,55 kg

Choice of guide body profile:

0 **(0)** Standard **(1)** stainless guide rods **(2)** stainless guide rods and screws **(3)** stainless guide rods, rollers and screws

Choice of carriages:

0 **(0)**

(1)

Size	Version 1	
	Q	L
60	184	306
60S	214	336
80	210	391
80S	234	415
100	316	546

0 **Coupling - shaft mounting:**

0

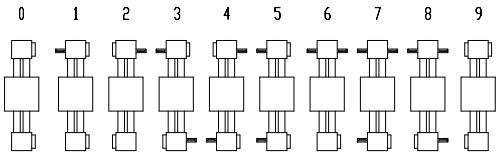

Version 9 is the same as 0, but with double sided coupling claw.

The standard version is supplied without shaft.

Belt table

Code No.		Size	Belt	mm/rev.	Number of teeth
0	**4**	60 (S)	5M25	130	26
0	**7**	80 (S)	8M30	176	22
0	**9**	100	8M50	224	28

Shaft dimensions

Size	Shaft ø h6 x length	Key
60 (S)	14 x 35	5x5x28
80 (S)	18 x 45	6x6x40
100	22 x 45	6x6x40

Basic Length + Stroke + Overtravel** = total length
**Minimum 25mm on each end

MLZ	60	1	0	0	0	0	4	1	01500
	Pos.	1	2	3	4	5	6	7	

For combination kits and connecting elements refer to chapter 2.2

Sample ordering code:
MLZ 60 with standard body profile, standard carriage, coupling claw on one side, 1210 mm stroke.

Possible Mounting Styles

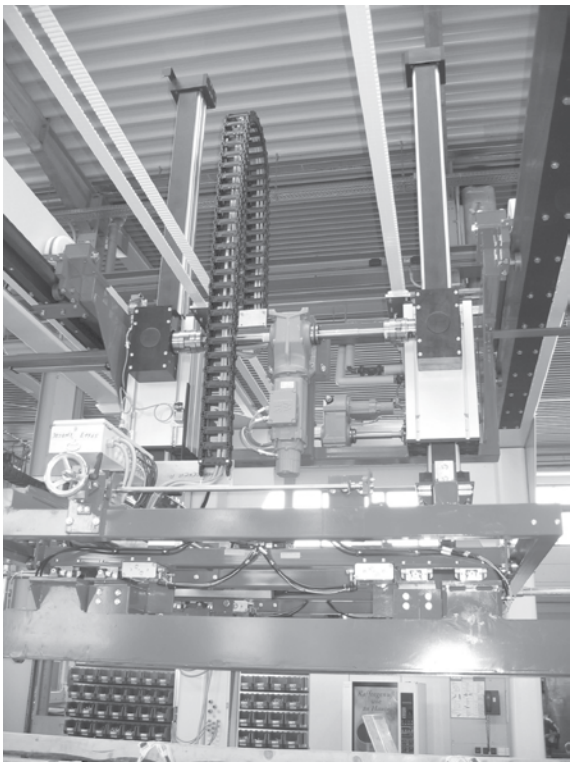

Operational Principle ELFZ

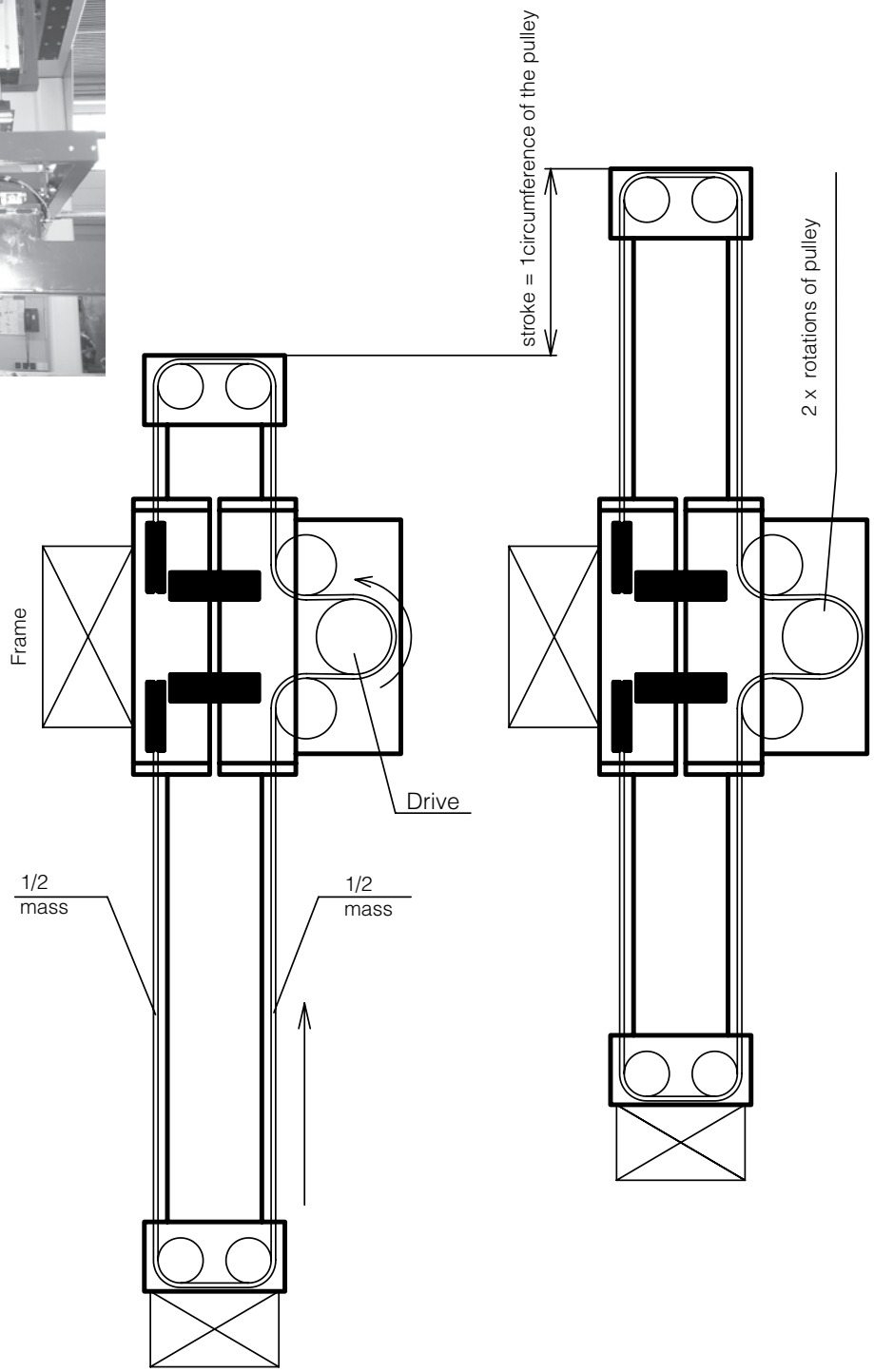

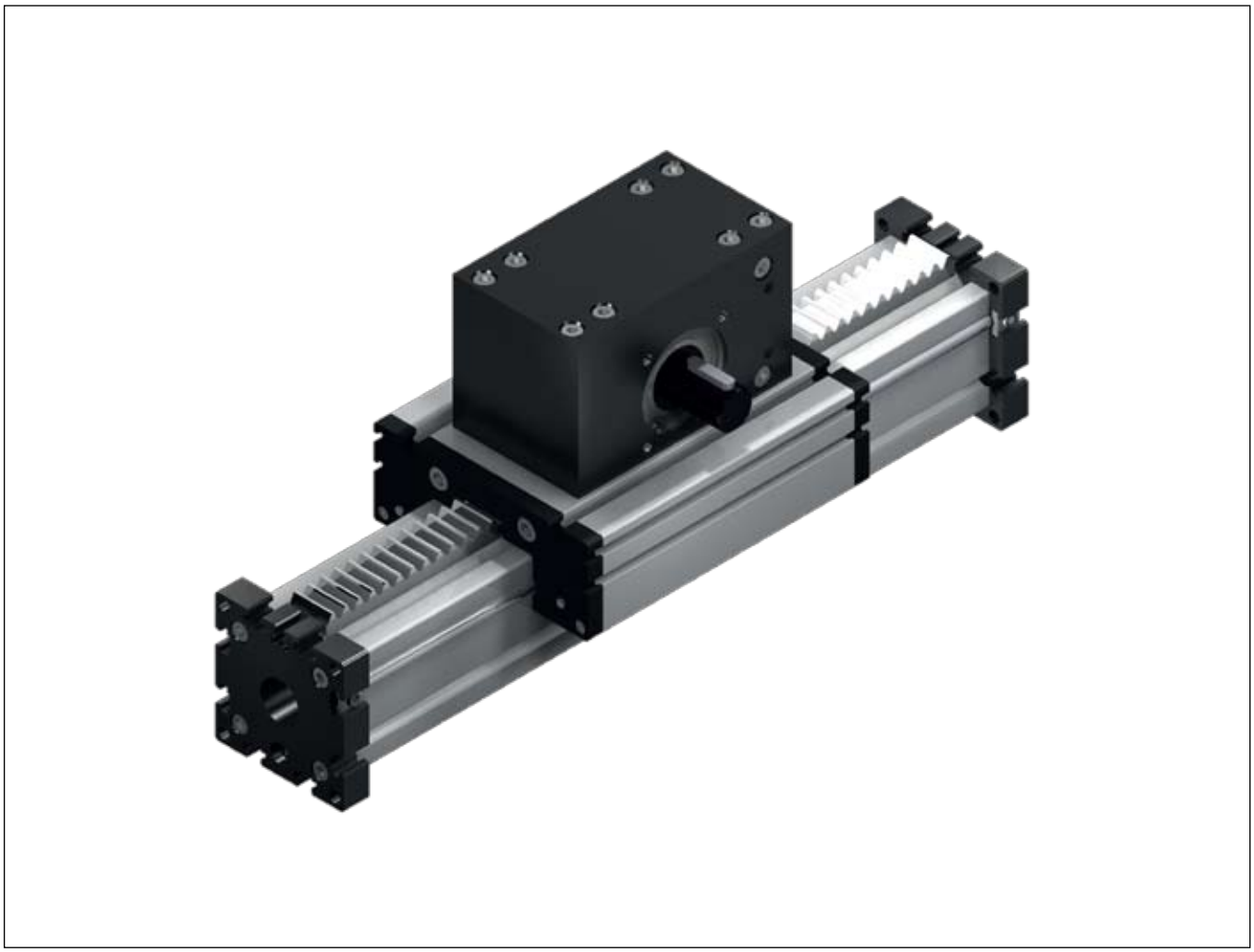

Rack and Pinion Driven Modular Linear Actuators ELZA, ELZQ

Modular Linear Actuator
ELZA 40, 60, 60S, 80, 80S, 100

Rack and Pinion Drive **Specifications**

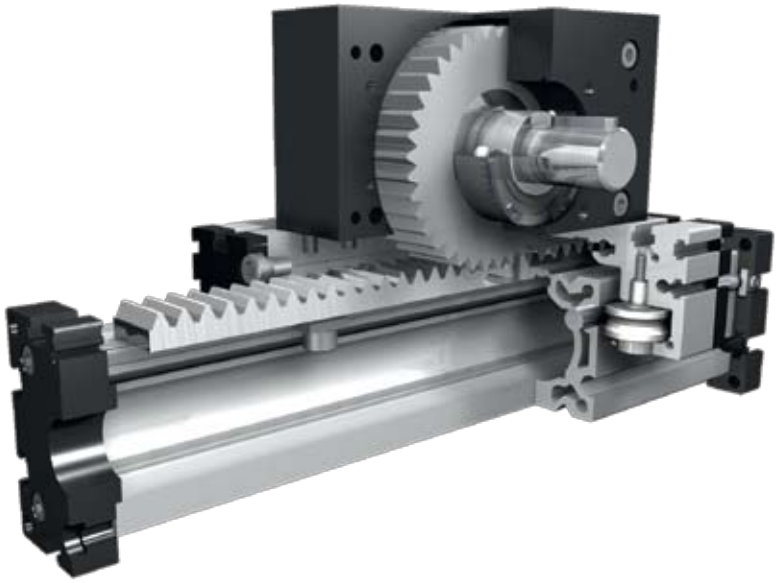

Function:
This unit consists of an aluminium square profile with integrated, hardened steel guide rods. The carriage, which has internal linear ball bearings that can be adjusted free of play, is driven by a rack and pinion. The pinion is equipped with maintenance-free ball bearings.

Fitting position: As required. Max. length without joints 6.000 mm.
Carriage mounting: By T-slots.
Unit mounting: By T-slots and holes in the bearing blocks, mounting sets.
Rack: C 45 or St 60 zinc coated, stainless steel on request. Repeatability: ± 0,2 mm.

Forces and torques

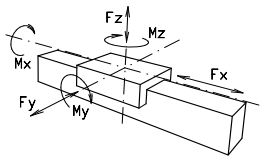

Size	ELZA 40		ELZA 60		ELZA 60 S		ELZA 80		ELZA 80 S		ELZA 100	
Forces/Torques	static	dynamic	static	dynamic	static	dynamic	static	dynamic	static	dynamic	static	dynamic
F_x (N)	900	750	1500	1200	1500	1200	2200	1800	2200	1800	2900	2500
F_y (N)	1200	700	3000	2000	4100	3100	3000	2000	4600	3600	8000	6500
F_z (N)	900	650	1700	1100	2160	1600	1700	1100	3000	1800	3600	2200
M_x (Nm)	25	20	67	43	88	65	90	55	170	140	300	230
M_y (Nm)	32	18	90	70	190	140	110	80	270	230	400	270
M_z (Nm)	35	25	120	100	230	170	150	120	300	220	750	500

All forces and torques related to the following:

existing values / table values

$$\frac{Fy}{Fy_{dyn}} + \frac{Fz}{Fz_{dyn}} + \frac{Mx}{Mx_{dyn}} + \frac{My}{My_{dyn}} + \frac{Mz}{Mz_{dyn}} \leq 1$$

Speed					
(m/sec) max	2	2,5	2,5	3	3	3
Geometrical moments of inertia of aluminium profile						
I_x mm^4	$1{,}32 \times 10^5$	$6{,}79 \times 10^5$	$6{,}79 \times 10^5$	$18{,}99 \times 10^5$	$18{,}99 \times 10^5$	$44{,}4 \times 10^5$
I_y mm^4	$1{,}34 \times 10^5$	$6{,}97 \times 10^5$	$6{,}97 \times 10^5$	$18{,}97 \times 10^5$	$18{,}97 \times 10^5$	$44{,}8 \times 10^5$
E-Modulus N/mm^2	70000	70000	70000	70000	70000	70000

Formula: ELZA
Driving torque:

$$M_a = \frac{F*P*S_i}{2000*\pi} + M_{leer}$$

$$P_a = \frac{M_a*n}{9550}$$

F	= force	(N)
P	= pulley action perimeter	(mm)
S_i	= safety factor 1,2 ... 2	
M_{leer}	= no-load torque	(Nm)
n	= rpm pulley	(min^{-1})
M_a	= driving torque	(Nm)
P_a	= motor power	(KW)

$$f = \frac{F*L^3}{E*I*192}$$

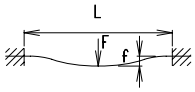

f	= deflection	(mm)
F	= load	(N)
L	= free length	(mm)
E	= elastic modulus 70000	(N/mm^2)
I	= second moment of area	(mm^4)

nookindustries.com toll-free 1 (800) 321-7800
www.nookindustries.ru (499) 703 35 98 sell@nookindustries.ru

Modular Linear Actuator
ELZA 40, 60, 60S, 80, 80S, 100

Dimensions (mm)

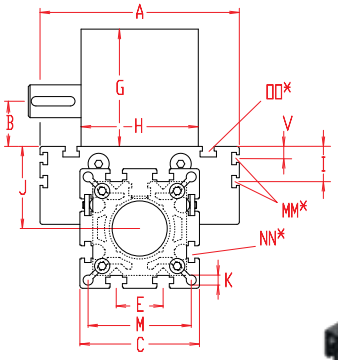

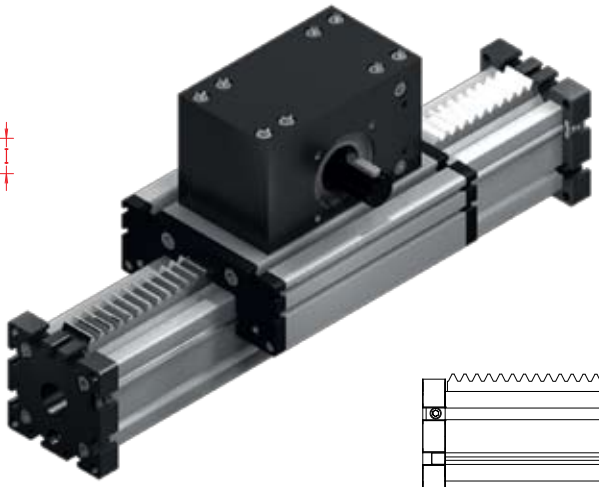

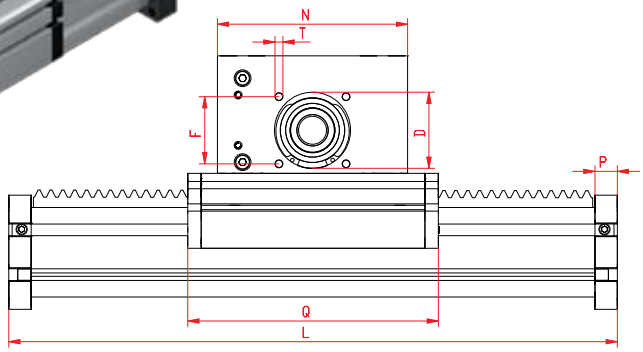

Increasing the carriage length will increase the basic length by the same amount.

*For slide nuts refer to accessory section

Size	Basic length L	A	B	C	D	E	F	G	H	I	J	K	M	MM for	N	NN for	OO for	P	Q	T	V	Basic weight	Weight per 100 mm
ELZA 40	150	100	21,5	58	37	18	32	60	56	-	35	6,5	47	-	100	M 6	M 6	12	122	M 6	-	2,0 kg	0,35 kg
ELZA 60	205	144	28,0	82	47	30	42	75	63	-	49	8,5	69	-	130	M 8	M 8	16	168	M 6	-	5,3 kg	0,68 kg
ELZA 60S	230	170	28,0	82	47	30	42	75	63	-	53	8,5	69	-	130	M 8	M 8	16	194	M 6	10	6,3 kg	0,68 kg
ELZA 80	240	170	39,0	102	68	40	60	105	100	30	70	8,5	88	M 6	170	M 10	M 10	20	194	M 8	10	11,9 kg	1,19 kg
ELZA 80S	260	190	39,0	102	68	40	60	105	100	30	71	8,5	88	M 6	170	M 10	M 8	20	214	M 8	12,5	12,9 kg	1,19 kg
ELZA 100	360	230	55,3	130	90	50	80	155	120	29	89	10,5	112	M 10	240	M 10	M 10	30	300	M 10	-	24,0 kg	1,75 kg

Choice of guide body profile:

0 **(0)** Standard **(1)** stainless guide rods **(2)** stainless guide rods and screws **(3)** stainless guide rods, rollers and screws

Choice of carriages:

0

(0)

(1)

(2)

(3)

Size	Version 1		Version 2		Version 3	
	Q	L	Q	L	Q	L
40	227	255	138	166	243	271
60	303	340	184	221	319	356
60S	329	366	214	251	349	386
80	369	415	210	256	385	431
80S	389	435	234	280	409	455
100	505	565	316	376	521	581

Selection of shaft mounting:

1

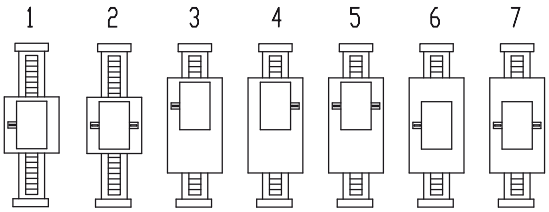

Size	Shaft ø h6 x length	Key	Pinion	
			mm/rev.	Modul
40	14 x 30	5x5x28	188,5	1,5
60 (S)	18 x 30	6x6x28	251,6	2
80 (S)	28 x 40	8x7x35	358,0	3
100	28 x 40	8x7x35	508,9	3

1500 Basic Length + Stroke + Overtravel** = total length
**Minimum 25mm on each end

ELZA	60	0	0	0	1	0	3	0	01500
	Pos.	1	2	3	4	5	6	7	

For combination kits and connecting elements refer to accessory section

Sample ordering code:
ELZA 60 with standard body profile, standard carriage, standard shaft , 1295 mm stroke

Modular Linear Actuator
ELZQ 60, 80, 80S

Rack and Pinion Drive **Specifications**

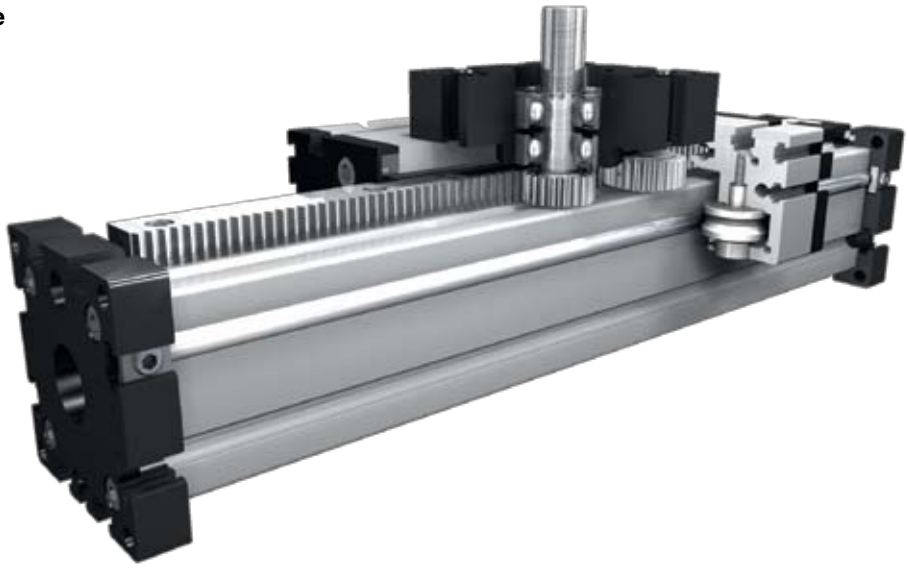

Function:
This unit consists of an aluminium square profile with integrated, hardened steel guide rods. The carriage, which has internal linear ball bearings that can be adjusted free of play, is driven along the guide rods by a high precision rack. The rack and pinion system is suitable for highly dynamic servo operation and ideal for lifting movements. The pinion has maintenance-free ball bearings. The rack is lubricated by a toothed felt wheel.

Fitting position: As required. Max. length without joints 6.000 mm.
Carriage mounting: By T-slots.
Unit mounting: By T-slots and holes in the bearing block, mounting sets.
Rack: Cf53; h6= hardened and ground; h7 = finely toothed. Repeatability: ± 0,1 mm.

Forces and torques

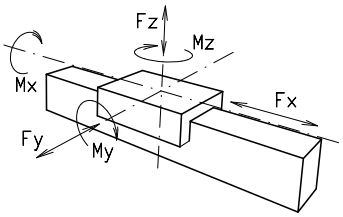

Size	ELZQ 60 h6		ELZQ 60 h7		ELZQ 80 h6		ELZQ 80 h7		ELZQ 80S h6		ELZQ 80S h7	
Forces/Torques	static	dynamic	static	dynamic	static	dynamic	static	dynamic	static	dynamic	static	dynamic
F_x (N)	1800	1400	940	780	1800	1400	940	780	1800	1400	940	780
F_y (N)	3000	2000	3000	2000	3000	2000	3000	2000	4600	3600	4600	3600
F_z (N)	1700	1100	1700	1100	1700	1100	1700	1100	3000	1800	3000	1800
M_x (Nm)	67	43	67	43	90	55	90	55	170	140	170	140
M_y (Nm)	90	70	90	70	110	80	110	80	270	230	270	230
M_z (Nm)	120	100	120	100	150	120	150	120	300	220	300	220
All forces and torques related to the following: existing values / table values $\frac{F_y}{F_{y_{dyn}}} + \frac{F_z}{F_{z_{dyn}}} + \frac{M_x}{M_{x_{dyn}}} + \frac{M_y}{M_{y_{dyn}}} + \frac{M_z}{M_{z_{dyn}}} \leq 1$												
Speed												
(m/sec) max	4		4		4		4		4		4	
Geometrical moments of inertia of aluminium profile												
I_x mm^4	6,79x10^5		6,79x10^5		18,99x10^5		18,99x10^5		18,99x10^5		18,99x10^5	
I_y mm^4	6,97x10^5		6,97x10^5		18,97x10^5		18,97x10^5		18,97x10^5		18,97x10^5	
E-Modulus N/mm²	70000		70000		70000		70000		70000		70000	

Formula: ELZQ
Driving torque:

$$M_a = \frac{F*P*S_i}{2000*\pi} + M_{leer}$$

$$P_a = \frac{M_a*n}{9550}$$

F	= force	(N)
P	= pulley action perimeter	(mm)
S_i	= safety factor 1,2 ... 2	
M_{leer}	= no-load torque	(Nm)
n	= rpm pulley	(min^{-1})
M_a	= driving torque	(Nm)
P_a	= motor power	(KW)

$$f = \frac{F*L^3}{E*I*192}$$

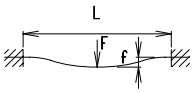

f	= deflection	(mm)
F	= load	(N)
L	= free length	(mm)
E	= elastic modulus 70000	(N/mm²)
I	= second moment of area	(mm^4)

nookindustries.com toll-free 1 (800) 321-7800
www.nookindustries.ru (499) 703 35 98 sell@nookindustries.ru

Modular Linear Actuator
ELZQ 60, 80, 80S

Dimensions (mm)

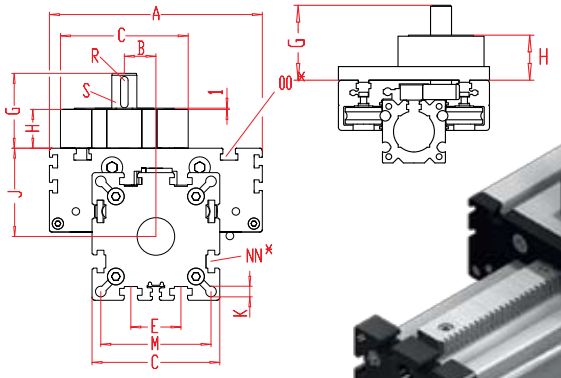

Size 60 with mounting plate on carriage.

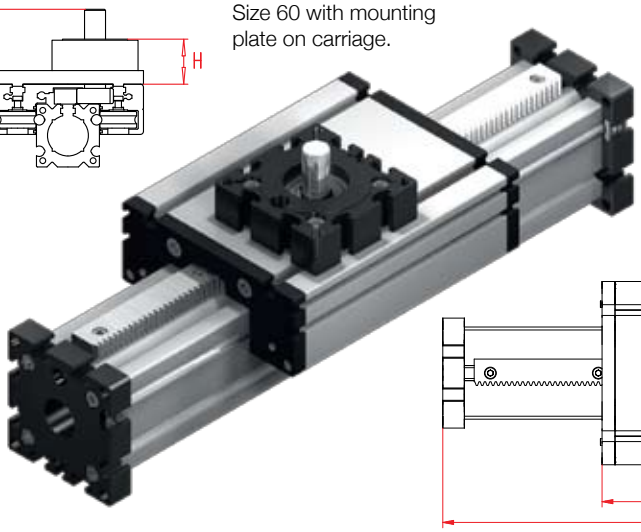

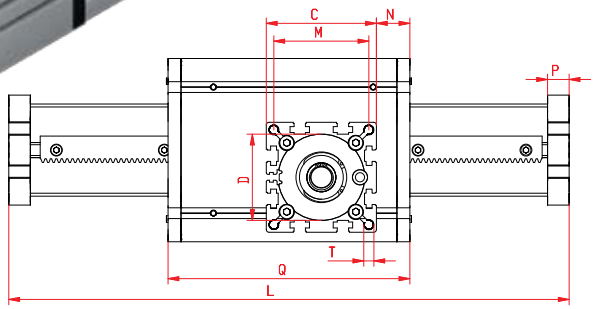

Increasing the carriage length will increase the basic length by the same amount.

*For slide nuts refer to accessory section

Size	Basic length L	A	B	C	D Ø	E	G	H	J	K	M	N	NN for	OO for	P	Q	T	Basic weight	Weight per 100 mm
ELZQ 60	230	144	25,5	82	62	30	71,5	42	49	8,5	69	32	M 8	M 8	16	194	M 10	5,0 kg	0,68 kg
ELZQ 80	260	170	25,5	102	80	40	60,5	31	70	8,5	88	25	M 10	M 10	20	214	M 10	11,0 kg	1,19 kg
ELZQ 80S	280	190	25,5	102	80	40	62,5	33	71	8,5	88	25	M 10	M 8	20	234	M 10	12,0 Kg	1,19 kg

Choice of guide body profile:

0

(0) Standard **(1)** stainless guide rods **(2)** stainless guide rods and screws **(3)** stainless guide rods, rollers and screws

Choice of carriages:

0

(0)

(1)

(2)

(3)

Size	Version 1		Version 2		Version 3	
	Q	L	Q	L	Q	L
60	338	374	210	246	354	390
80	384	430	230	276	400	446
80S	404	450	254	300	420	466

Position of drive:

1

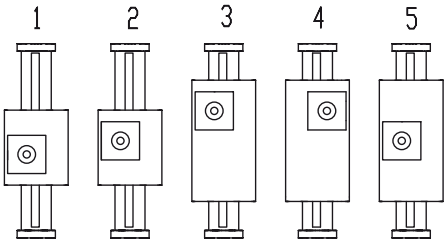

Size ⊠	Shaft ø h6 x length	Key	Pinion	
			mm/rev.	Modul
60	20 x 29,5	6x6x25	100	1,6
80 (S)	20 x 29,5	6x6x25	100	1,6

Rack and pinion accuracy

0

(0) h7 (standard) **(1)** h6 (hardened and ground, finely toothed)

1500

Basic Length + Stroke + Overtravel** = total length
**Minimum 25mm on each end

ELZQ	60	0	0	0	1	0	2	0	01500
	Pos.	1	2	3	4	5	6	7	

For combination kits and connecting elements refer to accessory section

Sample ordering code:
ELZQ 60 with standard body profile, standard carriage, position of drive 1, rack and pinion accuracy class h7, 1270 mm stroke

Example for ELZA

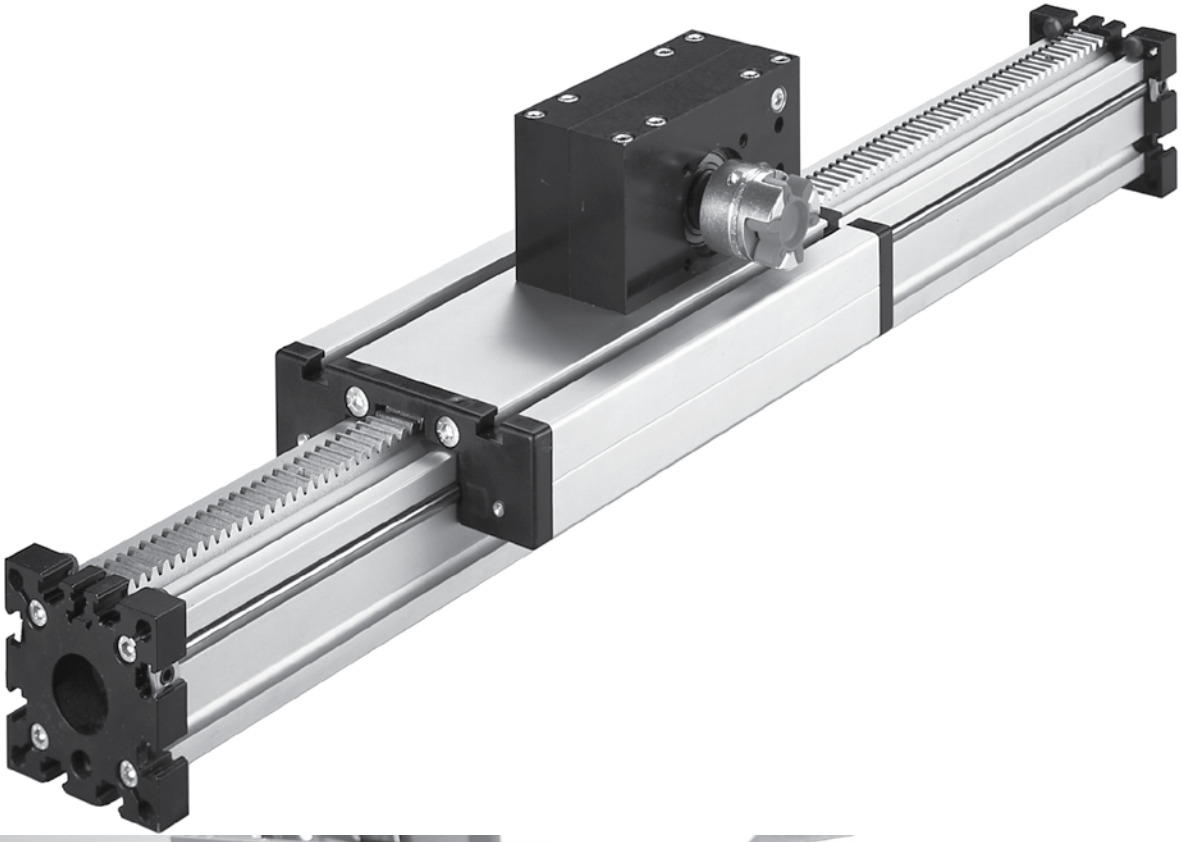

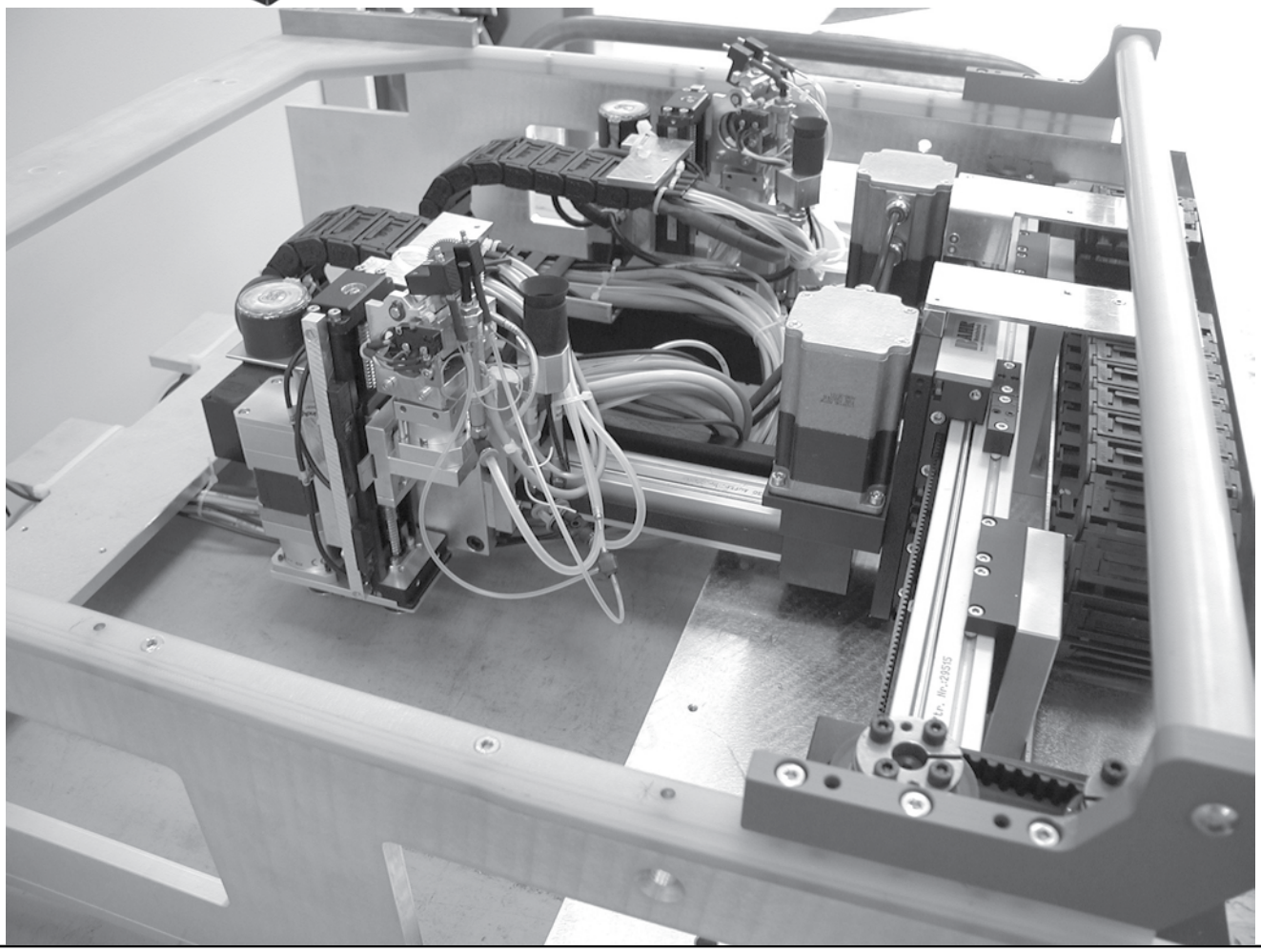

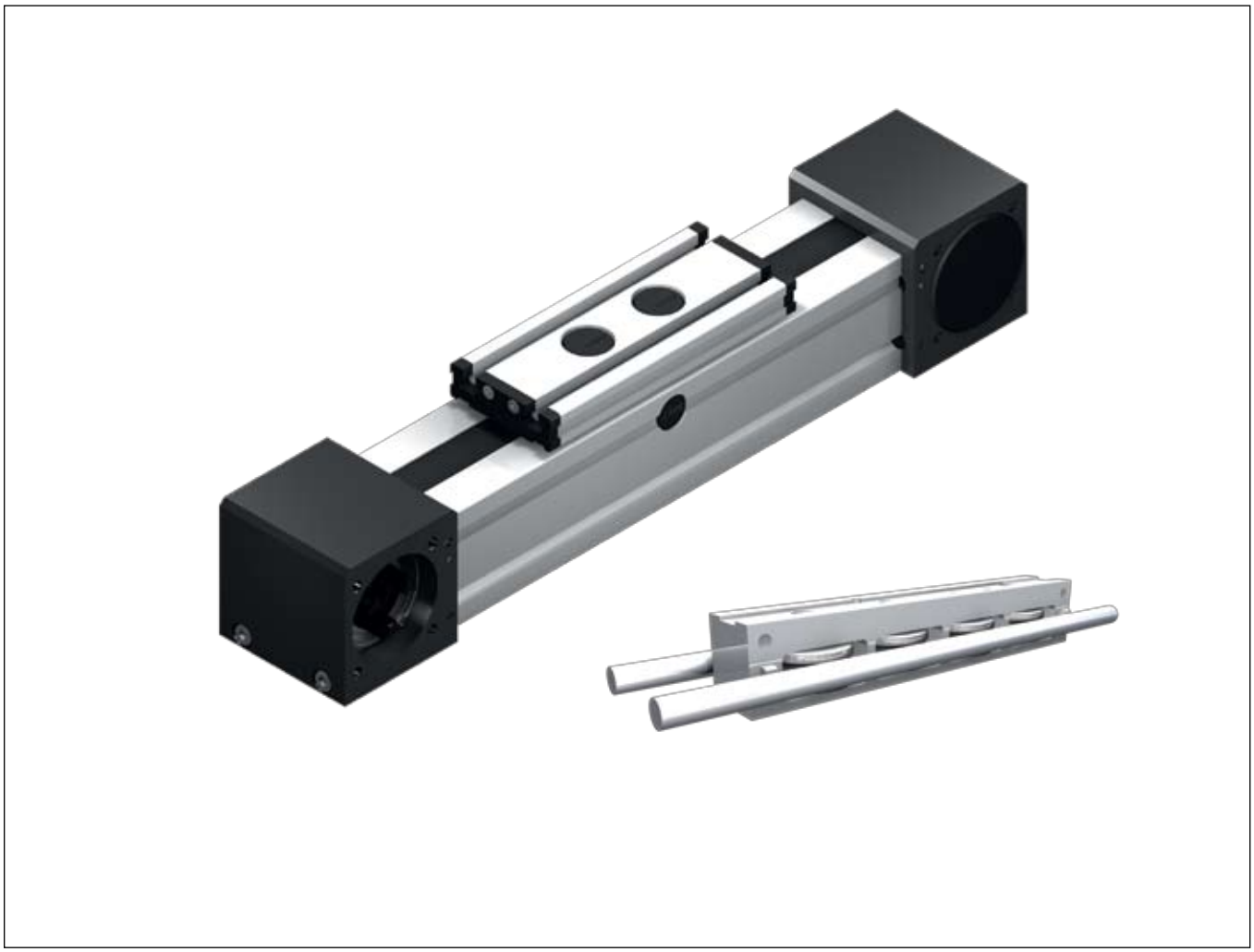

Roller Guide
Modular Linear Actuators
QL

Modular Linear Actuator
QLZ 60, 80, 100

Belt drive **Specifications**

Function:
This unit consists of a square aluminium profile with an integrated roller guide. The carriage is driven by a timing belt. Each standard pulley includes one coupling claw on one side. Belt tension can be readjusted by a simple screw adjustment device in the carriage. This device can also be used for symmetrical adjustment of two or more linear units running parallel.
This linear unit is suitable for application in clean rooms of clean-room classification 1.000 (corresponding to US Fed. Standard 209 E).

Fitting position: As required. Max. length 6.000 mm without joints.
Carriage mounting: By T-slots.
Unit mounting: By T-slots and mounting sets. The linear axis can be combined with any T-slot profile.
Belt performance: HTD with steel reinforcement, no backlash when changing direction, repeatability ± 0,1 mm.
Carriage support: In the standard version, the carriage runs on 4 rollers which can be adjusted and serviced at a central servicing position. For longer carriages the number of rollers can be increased.

Forces and torques

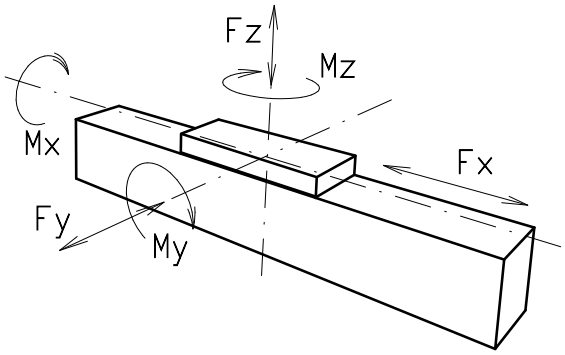

Size	60		80		100	
Forces/Torques	static	dynamic	static	dynamic	static	dynamic
F_x (N)	894	800	1900	1800	4000	3800
F_y (N)	600	500	1600	1240	1900	1500
F_z (N)	900	650	1500	1200	2100	1700
M_x (Nm)	15	10	50	40	85	60
M_y (Nm)	60	50	100	80	140	110
M_z (Nm)	40	30	75	60	110	90

All forces and torques related to the following:

existing values / table values: $\frac{Fy}{Fy_{dyn}} + \frac{Fz}{Fz_{dyn}} + \frac{Mx}{Mx_{dyn}} + \frac{My}{My_{dyn}} + \frac{Mz}{Mz_{dyn}} \leq 1$

No-load torque			
Nm	0,6	0,8	1,2
Speed			
(m/sec) max	4	6	7
Tensile force			
permanent (N)	900	1900	4000
0,2 sec (N)	1000	2090	4300
Geometrical moments of inertia of aluminium profile			
I_x mm^4	4,3x10^5	16,5x10^5	43,0x10^5
I_y mm^4	4,8x10^5	18,7x10^5	48,8x10^5
Elastic modulus N/mm^2	70000	70000	70000

Formula: QLZ
Driving torque:

$$M_a = \frac{F*P*S_i}{2000*\pi} + M_{leer}$$

$$P_a = \frac{M_a*n}{9550}$$

F = force (N)
P = pulley action perimeter (mm)
S_i = safety factor 1,2 ... 2
M_{leer} = no-load torque (Nm)
n = rpm pulley (min^{-1})
M_a = driving torque (Nm)
P_a = motor power (KW)

$$f = \frac{F*L^3}{E*I*192}$$

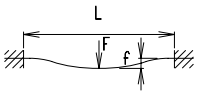

f = deflection (mm)
F = load (N)
L = free length (mm)
E = elastic modulus 70000 (N/mm^2)
I = second moment of area (mm^4)

nookindustries.com toll-free 1 (800) 321-7800
www.nookindustries.ru (499) 703 35 98 sell@nookindustries.ru

Modular Linear Actuator
QLZ 60, 80, 100

Dimensions (mm)

Increasing the carriage length will increase the basic length by the same amount.

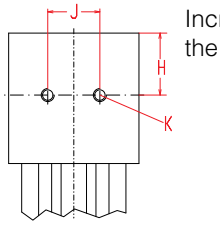

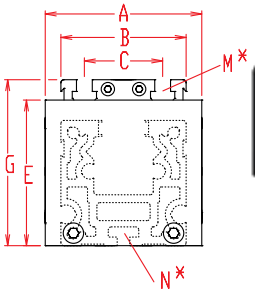

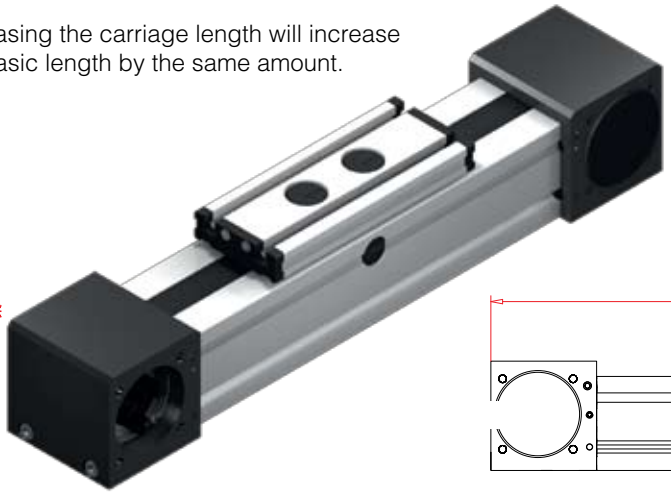

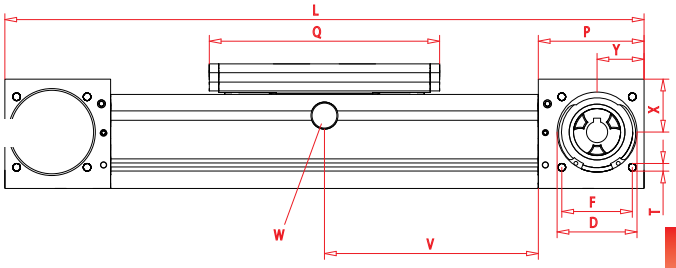

*For slide nuts refer to accessory section V = Q + 100 mm W = servicing position

Size	Basic length L	A	B	C	D	E	F	G	H	J	K	N for	M for	P	Q	T	X	Y	Basic weight	Weight per 100 mm
QLZ 60	280	80	60	36	47	63	42	79	29,5	30	M 8	M 5	M 6	59	152	M 6	27	26	3,2 Kg	0,39 kg
QLZ 80	390	100	80	50	68	93	60	106	47,5	40	M 10	M 6	M 8	90	196	M 8	45	40	9,6 Kg	0,78 Kg
QLZ 100	490	130	100	66	90	110	80	129	55	50	M 12	M 10	M 10	110	260	M 10	49	50	15,8 kg	1,45 Kg

Choice of guide body profile:

0

(0) Standard **(1)** stainless guide rods **(2)** stainless guide rods and screws **(3)** stainless guide rods, rollers and screws

Choice of carriages:

0

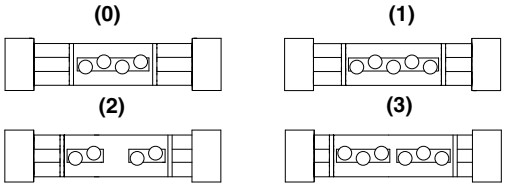

Size	Version 0		Version 1		Version 2		Version 3	
	Q	L	Q	L	Q	L	Q	L
60	152	280	192	320	>232	>360	>232	>360
80	196	390	246	440	>296	>490	>296	>490
100	260	490	320	550	>388	>610	>388	>610

Coupling - Selection of shaft mounting:

0

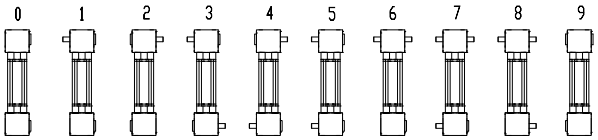

Size	Shaft ø h6 x length	Key
60	14 x 35	5x5x28
80	18 x 45	6x6x40
100	22 x 45	6x6x40

9 is as 0, but with coupling claws on both sides. The standard version is supplied without shaft. A shaft can be retrofitted by inserting it into the pulley bore and securing it with 2 locking rings or tension sets (size 100).

Belt table

Code No.		Size	Belt	Pulley	
				mm/rev.	Number of teeth
0	**3**	60	5M25	130	26
0	**4**	80	8M30	176	22
0	**7**	100	8M50	224	28

Basic Length + Stroke + Overtravel** = total length
**Minimum 25mm on each end

QLZ	80	1	0	0	0	0	4	1	01500
	Pos.	1	2	3	4	5	6	7	

For additional accessories refer to accessory section

Sample ordering code:
QLZ80, standard body profile, standard carriage, coupling claw on one side, 1110 mm stroke

Modular Linear Actuator
QLR 60, 80, 100

Roller Guide **Specifications**

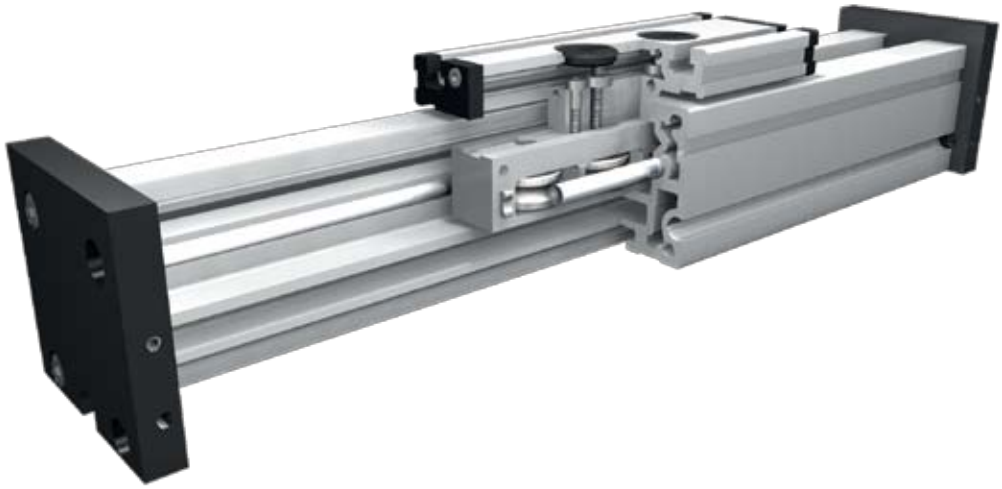

5.1

Function:
This unit consists of a square aluminium profile with an integrated roller guide. The carriage, which has internal linear ball bearings that can be adjusted free of play, moves along the guide body. This roller guide can be driven by a pneumatic cylinder or other additional drives or it serves as a load carrying slide unit.

Fitting position: As required. Max. length 6.000 mm without joints.
Carriage mounting: By T-slots.
Unit mounting: By T-slots and mounting sets. The linear axis can be combined with any T-slot profile.
Carriage support: In the standard version, the carriage runs on 4 rollers which can be adjusted and serviced at a central servicing position. For longer carriages the number of rollers can be increased.

Forces and torques

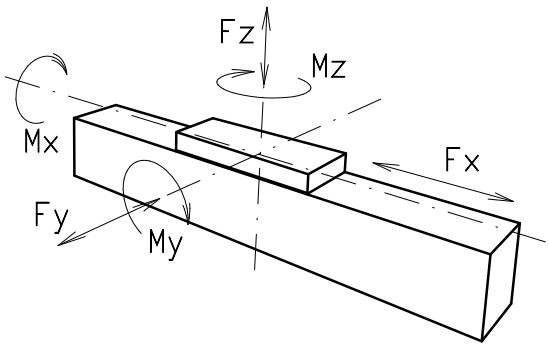

Size	60		80		100	
Forces/torques	static	dynamic	static	dynamic	static	dynamic
F_x (N)	-	-	-	-	-	-
F_y (N)	600	500	1600	1240	1900	1500
F_z (N)	900	650	1500	1200	2100	1700
M_x (Nm)	15	10	50	40	85	60
M_y (Nm)	60	50	100	80	140	110
M_z (Nm)	40	30	75	60	110	90
All forces and torques related to the following: existing values / table values	$\frac{Fy}{Fy_{dyn}} + \frac{Fz}{Fz_{dyn}} + \frac{Mx}{Mx_{dyn}} + \frac{My}{My_{dyn}} + \frac{Mz}{Mz_{dyn}} \leq 1$					
Speed						
(m/sec) max	4		6		7	
Geometrical moments of inertia of aluminium profile						
I_x mm^4	$4{,}3 \times 10^5$		$16{,}5 \times 10^5$		$43{,}0 \times 10^5$	
I_y mm^4	$4{,}8 \times 10^5$		$18{,}7 \times 10^5$		$48{,}8 \times 10^5$	
Elastic modulus N/mm^2	70000		70000		70000	

Formula: QLR

$$f = \frac{F \cdot L^3}{E \cdot I \cdot 192}$$

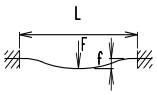

f = deflection (mm)
F = load (N)
L = free length (mm)
E = elastic modulus 70000 (N/mm^2)
I = second moment of area (mm^4)

Modular Linear Actuator
QLR 60, 80, 100

Dimensions (mm)

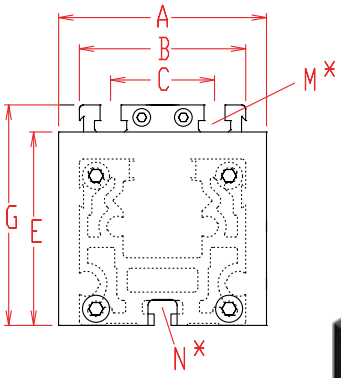

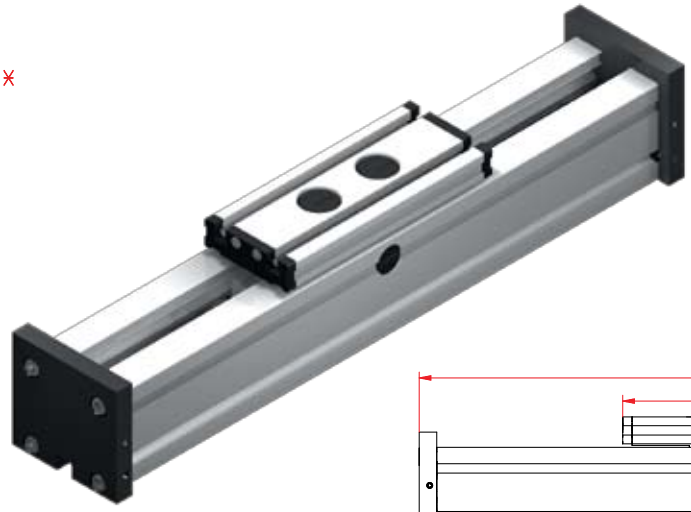

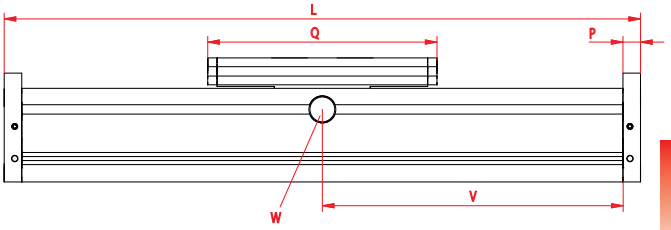

Increasing the carriage length will increase the basic length by the same amount.

*For slide nuts refer to accessory section V = Q + 100 mm W = servicing position

Size	Basic length L	A	B	C	E	G	N for	M for	P	Q	Basic weight	Weight per 100 mm
QLR 60	180	80	60	36	60	79	M 5	M 6	12	152	1,45 kg	0,36 kg
QLR 80	240	100	80	50	93	106	M 6	M 8	17	196	4,2 kg	0,75 kg
QLR 100	310	130	100	66	110	129	M 10	M 10	20	260	7,2 kg	1,42 kg

Choice of body profile:
(0) Standard **(1)** stainless guide rods **(2)** stainless guide rods and screws **(3)** stainless guide rods, rollers and screws

Choice of carriages:

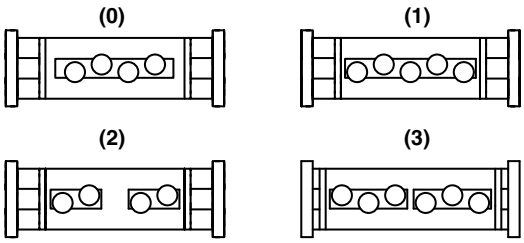

Size	Version 0		Version 1		Version 2		Version 3	
	Q	L	Q	L	Q	L	Q	L
60	152	180	192	220	>232	>260	>232	>260
80	196	240	246	290	>296	>340	>296	>340
100	260	310	320	370	>388	>430	>388	>430

QLR	80	0	0	0	0	0	0	0	01500
	Pos.	1	2	3	4	5	6	7	

1500 Basic length + stroke = total length

For additional accessories refer to accessory section

Sample ordering code:
QLR80 with standard body profile, standard carriage and 1260 mm stroke

Possible Mounting Styles

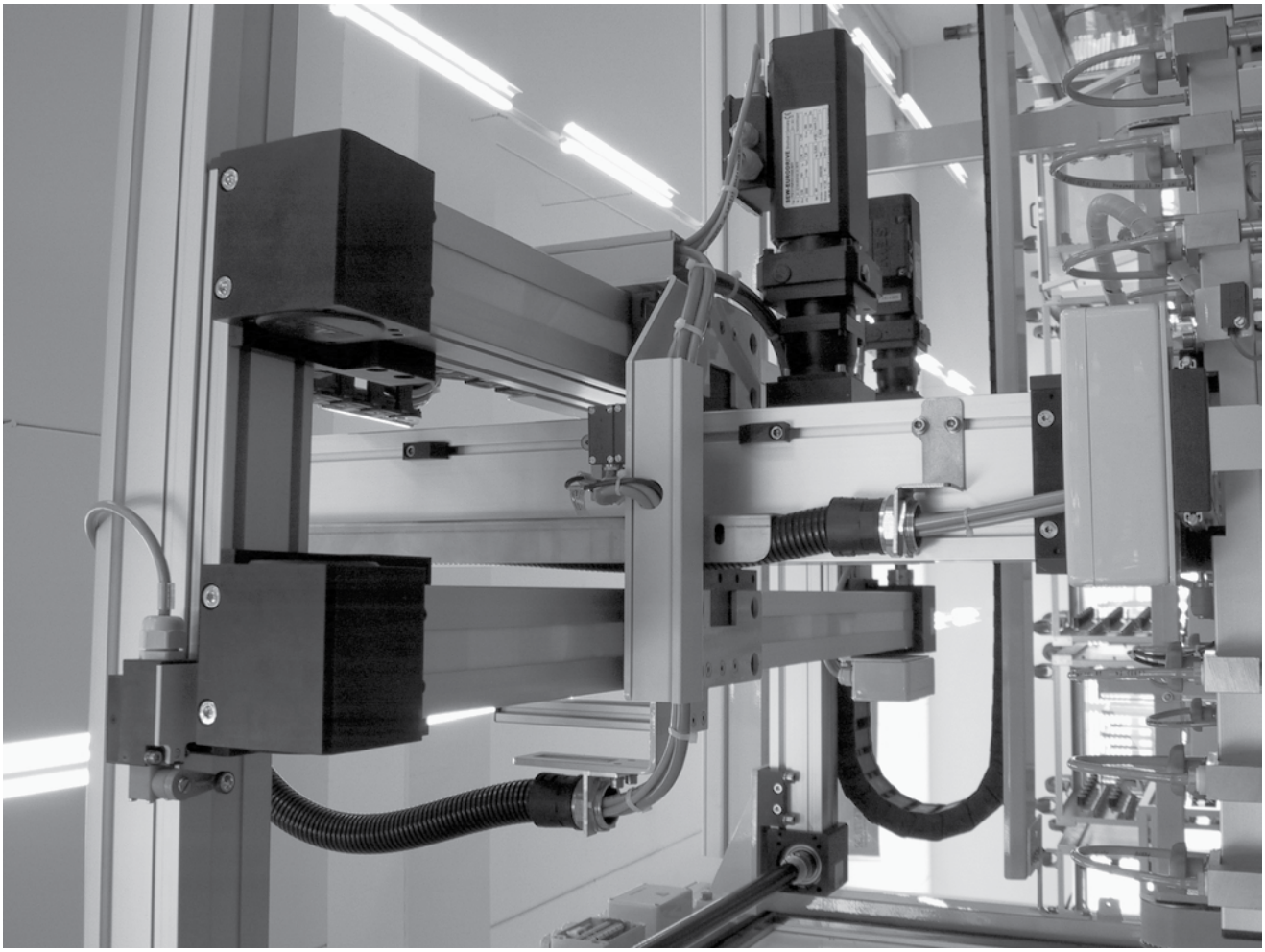

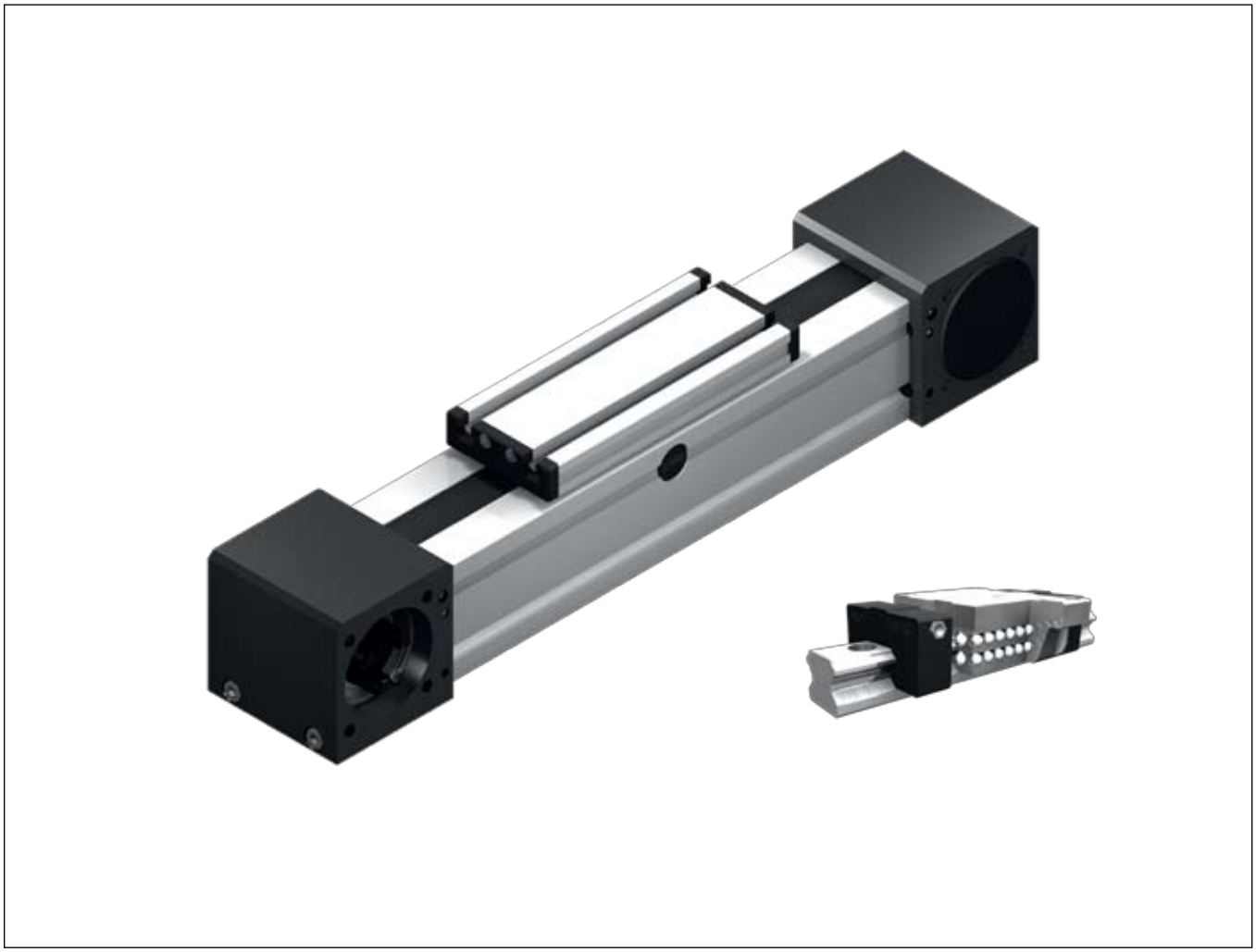

Rail Guide
Modular Linear Actuators
QS

Modular Linear Actuator
QSZ 60, 80, 100

Belt Drive **Specifications**

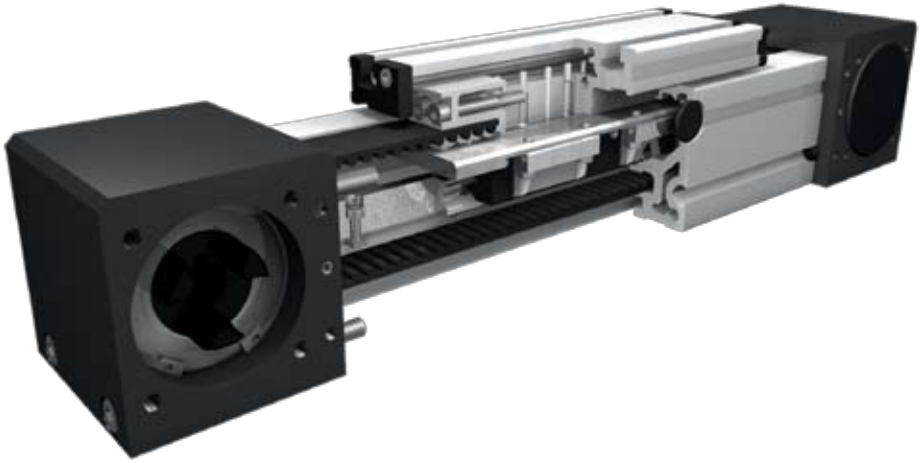

Function:
This unit consists of a square aluminium profile with an integrated ball rail. The carriage is moved by a belt drive. Each standard pulley includes one coupling claw on one side. Belt tension can be readjusted by a simple screw adjustment device in the carriage. This device can also be used for symmetrical adjustment of two or more linear units running parallel.

Fitting position: As required. Max. length 6.000 mm without joints.
Carriage mounting: By T-slots.
Unit mounting: By T-slots and mounting sets. The linear axis can be combined with any T-slot profile.
Belt performance: HTD with steel reinforcement, no backlash when changing direction, repeatability ± 0,1 mm.
Carriage support: In the standard version, the carriage runs on two runner blocks which can be adjusted and serviced at a central servicing position. For longer carriages the number of runner blocks can be increased.

Forces and torques

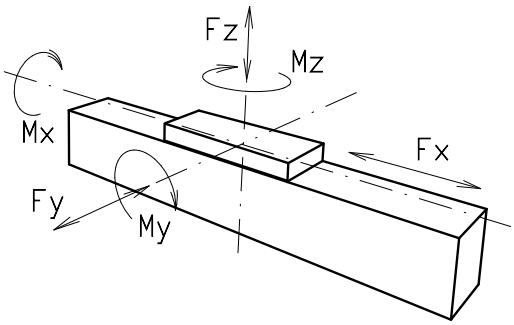

Size	60		80		100	
permitted dyn. forces*	5000 km	10000 km	5000 km	10000 km	5000 km	10000 km
F_x (N)	894	800	1900	1800	4000	3800
F_y (N)	1410	990	3570	2550	4080	2900
F_z (N)	3520	2500	8500	6050	10300	7270
M_x (Nm)	33	23	107	75	142	101
M_y (Nm)	104	73	310	222	439	311
M_z (Nm)	100	70	296	210	412	292
C (N)	7800		18800		22800	
All forces and torques related to the following: existing values / table values: $\frac{Fy}{Fy_{dyn}} + \frac{Fz}{Fz_{dyn}} + \frac{Mx}{Mx_{dyn}} + \frac{My}{My_{dyn}} + \frac{Mz}{Mz_{dyn}} \leq 1$						
No-load torque						
Nm	1,0		1,4		1,8	
Speed						
(m/sec) max	5		5		5	
Tensile force						
permanent (N)	900		1900		4000	
0,2 sec (N)	1000		2090		4300	
Geometrical moments of inertia of aluminium profile						
I_x mm^4	$4{,}3 \times 10^5$		$16{,}5 \times 10^5$		$43{,}0 \times 10^5$	
I_y mm^4	$4{,}8 \times 10^5$		$18{,}7 \times 10^5$		$48{,}8 \times 10^5$	
Elastic modulus N/mm^2	70000		70000		70000	

* referred to life-time

Formula: QSZ

Driving torque:

$$M_a = \frac{F*P*S_i}{2000*\pi} + M_{leer}$$

$$P_a = \frac{M_a*n}{9550}$$

F = force (N)
P = pulley action perimeter (mm)
S_i = safety factor 1,2 ... 2
M_{leer} = no-load torque (Nm)
n = rpm pulley (min^{-1})
M_a = driving torque (Nm)
P_a = motor power (KW)

Deflection:

$$f = \frac{F*L^3}{E*I*192}$$

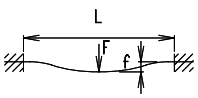

f = deflection (mm)
F = load (N)
L = free length (mm)
E = elastic modulus 70000 (N/mm^2)
I = second moment of area (mm^4)

Nominal lifetime:

$$L = \left(\frac{C}{F}\right)^3 x10^5$$

L = Lifetime in meters
C = Dynamic load factor (N)
F = Medium load (N)

nookindustries.com toll-free 1 (800) 321-7800
www.nookindustries.ru (499) 703 35 98 sell@nookindustries.ru

Modular Linear Actuator
QSZ 60, 80, 100

Dimensions (mm)

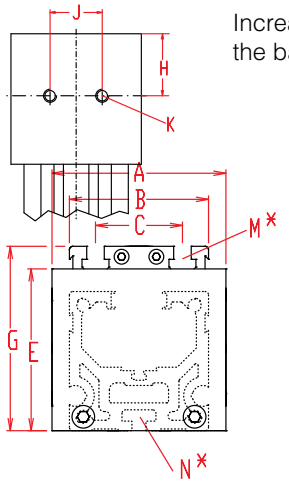

Increasing the carriage length will increase the basic length by the same amount.

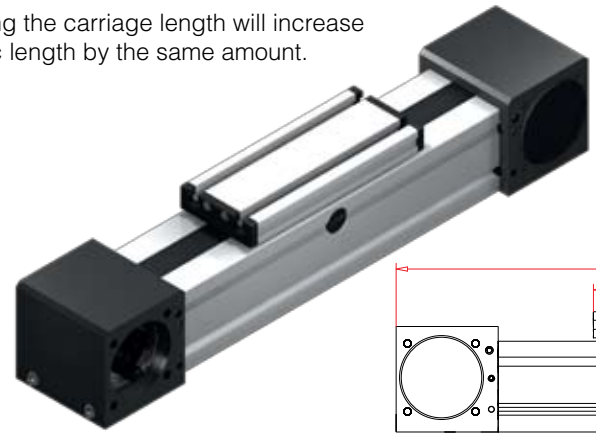

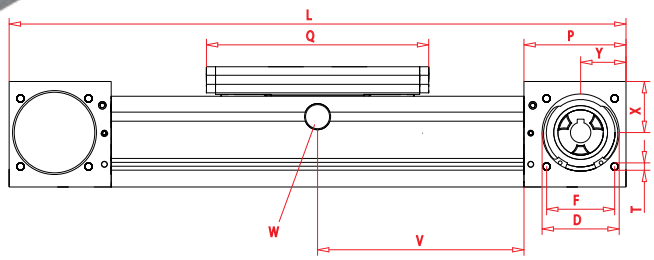

*For slide nuts refer to accessory section V = Q + 100 mm W = servicing position

Size	Basic length L	A	B	C	D	E	F	G	H	J	K	N for	M for	P	Q	T	X	Y	Basic weight	Weight per 100 mm
QSZ 60	300	80	60	36	47	63	42	79	29,5	30	M 8	M 5	M 6	59	177	M 6	27	26	3,5 kg	0,53 kg
QSZ 80	430	100	80	50	68	93	60	106	47,5	40	M 10	M 6	M 8	90	232	M 8	45	40	10,4 kg	1,02 kg
QSZ 100	510	130	100	66	90	110	80	129	55	50	M 12	M 10	M 10	110	268	M 10	49	50	15,9 kg	1,77 kg

Choice of guide body profile:

0 **(0)** Standard **(1)** stainless screws

Choice of carriages:

0

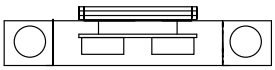

(2)

(1)

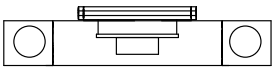

Size	Version 0		Version 1	
	Q	L	Q	L
60	177	300	152	280
80	232	430	196	390
100	268	510	260	500

Coupling - Selection of shaft mounting:

0

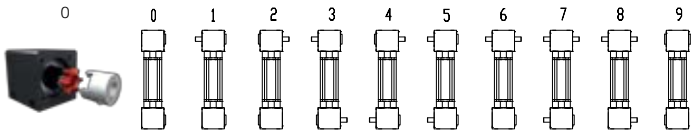

Size	Shaft ø h6 x length	Key
60	14 x 35	5x5x28
80	18 x 45	6x6x40
100	22 x 45	6x6x40

9 is as 0, but with coupling claws on both sides. The standard version is supplied without shaft. A shaft can be retrofitted by inserting it into the pulley bore and securing it with 2 locking rings.

Belt table

Code No.		Size	Belt	Pulley	
				mm/rev.	Number of teeth
0	**3**	60	5M25	130	26
0	**4**	80	8M30	176	22
0	**7**	100	8M50	224	28

Basic Length + Stroke + Overtravel** = total length
**Minimum 25mm on each end

QSZ	80	1	0	0	0	0	4	1	01500
	Pos.	1	2	3	4	5	6	7	

For additional accessories refer to accessory section

Sample ordering code:
QSZ80 with standard body profile, standard carriage, coupling claw on one side, 1070 mm stroke

Modular Linear Actuator
QSSZ 60, 80, 100

Belt Drive

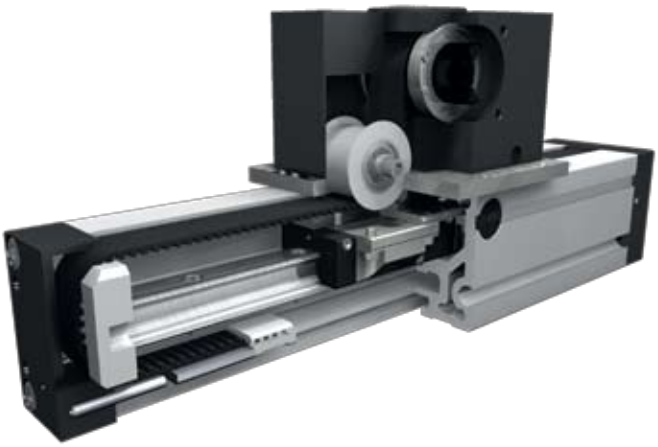

Function:
This linear unit consists of a square aluminium profile with integrated rail guidance. The carriage, which has runner blocks, is driven by a timing belt. Each standard pulley includes a coupling claw on one side and is equipped with maintenance-free ball bearings. Belt tension can be readjusted by a simple screw adjustment device in the carriage. This device can also be used for symmetrical adjustment of two or more linear units running parallel.

Fitting position: As required. Max. length 3.000 mm without joints.
Carriage mounting: By T-slots.
Unit mounting: By T-slots and mounting sets. The linear axis can be combined with any T-slot profile.
Belt performance: HTD with steel reinforcement, no backlash when changing direction, repeatability ± 0,1 mm.
Carriage support: In the standard version, the carriage runs on 4 runner blocks which can be serviced at a central servicing position. For longer carriages the number of runner blocks can be increased.

Forces and torques

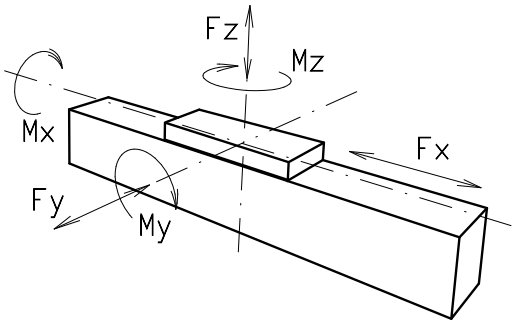

Size	60		80		100	
permitted dyn. forces*			5000 km	10000 km		
F_x (N)			894	800		
F_y (N)			3570	2550		
F_z (N)			8500	6050		
M_x (Nm)			107	75		
M_y (Nm)			310	222		
M_z (Nm)			296	210		
C (N)			18800			
All forces and torques related to the following: existing values / table values $\frac{Fy}{Fy_{dyn}} + \frac{Fz}{Fz_{dyn}} + \frac{Mx}{Mx_{dyn}} + \frac{My}{My_{dyn}} + \frac{Mz}{Mz_{dyn}} \leq 1$						
No-load torque						
Nm			1,4			
Speed						
(m/sec) max			5			
Tensile force						
permanent (N)			900			
0,2 sec (N)			1000			
Geometrical moments of inertia of aluminium profile						
I_x mm^4			$16{,}5 \times 10^5$			
I_y mm^4			$18{,}7 \times 10^5$			
Elastic modulus N/mm^2			70000			

* referred to life-time

Formula: QSSZ

Driving torque:

$$M_a = \frac{F*P*S_i}{2000*\pi} + M_{leer}$$

$$P_a = \frac{M_a*n}{9550}$$

F = force (N)
P = pulley action perimeter (mm)
S_i = safety factor 1,2 ... 2
M_{leer} = no-load torque (Nm)
n = rpm pulley (min^{-1})
M_a = driving torque (Nm)
P_a = motor power (KW)

Deflection:

$$f = \frac{F*L^3}{E*I*192}$$

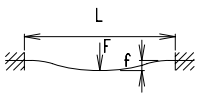

f = deflection (mm)
F = load (N)
L = free length (mm)
E = elastic modulus 70000 (N/mm^2)
I = second moment of area (mm^4)

Nominal lifetime:

$$L = \left(\frac{C}{F}\right)^3 \times 10^5$$

L = Lifetime in meters
C = Dynamic load factor (N)
F = Medium load (N)

nookindustries.com toll-free 1 (800) 321-7800

Modular Linear Actuator
QSSZ 60, 80, 100

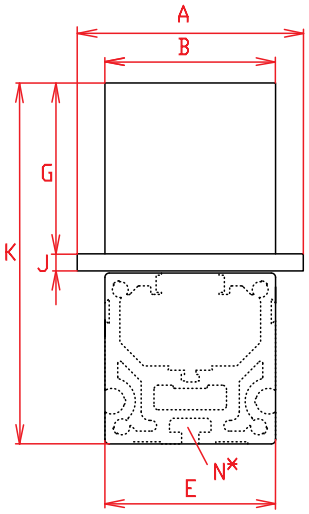

Increasing the carriage length will increase the basic length by the same amount.

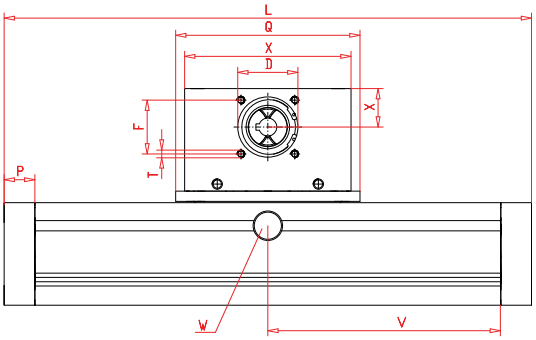

*For slide nuts refer to accessory section V = Q + 100 mm W = servicing position

Size	Basic length L	A	B	D	E	F	G	J	K	N for	P	Q	T	X	Y	Basic weight	Weight per 100 mm
QSSZ 60																	
QSSZ 80	200	106	80	47	80	42	80	8	169	M 6	24	144	M 6	130	30	5,7 kg	1,02 kg
QSSZ 100																	

6.1

Choice of guide body profile:
(0) Standard **(1)** stainless screws

Choice of carriages:

(0)

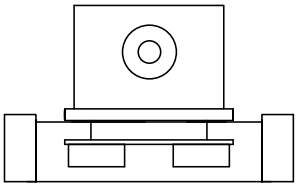

Coupling - Selection of shaft mounting:

0

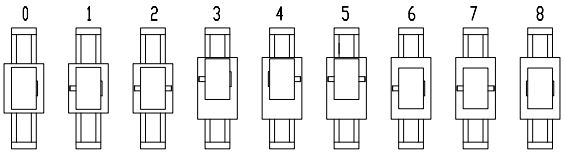

Size	Shaft ø h6 x length	Key
60		
80	14 x 35	5x5x28
100		

8 is as 0, but with coupling claws on both sides. The standard version is supplied without shaft. A shaft can be retro-fitted by inserting it into the pulley bore and securing it with 2 locking rings.

Belt table

Code No.		Size	Belt	Pulley	
				mm/rev.	Number of teeth
0	**7**	80	5M25	130	26

Basic Length + Stroke + Overtravel** = total length
**Minimum 25mm on each end

QSSZ	80	1	0	0	0	0	7	1	01500
	Pos.	1	2	3	4	5	6	7	

For additional accessories refer to accessory section

Sample ordering code:
QSSZ80, standard body profile, standard carriage, coupling claw on one side, 1300 mm stroke

Modular Linear Actuator
QST/K 60, 80, 100

Spindle Drives **Specifications**

Function:
This unit consists of a square aluminium profile with an integrated ball rail. The carriage is driven by means of a rotating screw with leading nut. The openings of the guide body are sealed by a stainless steel cover band to protect the drive from splash water and dust.

Fitting position: As required, max. length 3000mm
Carriage connection: By T-slots
Unit mounting: By half round slots and tapped holes in the bearing blocks, mounting sets

Forces and torques

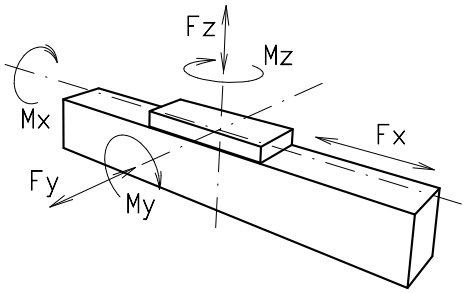

Size	QST/K 60		QST/K 80		QST/K 100	
permitted dyn. forces*	5000 km	10000 km	5000 km	10000 km	5000 km	10000 km
F_x (N)	900	800	2500	2000	5000	4000
F_y (N)	1415	1010	3570	2542	4082	2910
F_z (N)	3525	2510	8500	6050	10300	7360
M_x (Nm)	33	23	107	76	142	101
M_y (Nm)	190	143	604	430	838	597
M_z (Nm)	176	125	550	392	745	532
C (N)	7800		18800		22800	
All forces and torques related to the following: existing values / table values	$\frac{Fy}{Fy_{dyn}} + \frac{Fz}{Fz_{dyn}} + \frac{Mx}{Mx_{dyn}} + \frac{My}{My_{dyn}} + \frac{Mz}{Mz_{dyn}} \leq 1$					
No-load torque						
Acme	18x4/18x8		24x5/24x10		32x6/32x12	
Nm	0,6/0,7		0,6/0,8		1,5/1,7	
Ballscrew	16x5/16x10		25x5/20x20/25x10		32x5/32x10	
Nm	0,4/0,6		0,4/0,7/0,6		1,3/1,6	
Geometrical moments of inertia of aluminium profile						
I_x mm^4	$4{,}3 \times 10^5$		$14{,}0 \times 10^5$		$43{,}0 \times 10^5$	
I_y mm^4	$4{,}8 \times 10^5$		$16{,}6 \times 10^5$		$48{,}8 \times 10^5$	
E-Modulus N/mm^2	70000		70000		70000	

* referred to life-time

Formula: QST/K

Driving torque:

$$M_a = \frac{F*P*S_i}{2000*\pi*\mu} + M_{leer}$$

$$P_a = \frac{M_a*n}{9550}$$

F	= force	(N)
P	= thread pitch	(mm)
S_i	= safety factor 1,2 ... 2	
M_{leer}	= no-load torque	(Nm)
n	= rpm of screw	(min^{-1})
M_a	= driving torque	(Nm)
μ	= screw efficiency	
P_a	= motor power	(KW)

Efficiency of lead screws:

All ballscrew	0.900
Tr 18x4	0,399
Tr 18x8	0,565
Tr 24x5	0,384
Tr 24x10	0,550
Tr 32x6	0,360
Tr 32x12	0,524

Deflection:

$$f \quad \frac{F*L^3}{E*I*192} =$$

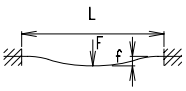

f	= deflection	(mm)
F	= load	(N)
L	= free length	(mm)
E	= elastic modulus 70000	(N/mm^2)
I	= second moment of area	(mm^4)

Nominal lifetime:

$$L \left(\frac{C}{F}\right)^3 =$$

L	= Lifetime in meters	
C	= Dynamic load factor	(N)
F	= Medium load	(N)

nookindustries.com toll-free 1 (800) 321-7800
www.nookindustries.ru (499) 703 35 98 sell@nookindustries.ru

Modular Linear Actuator
QST/K 60, 80, 100

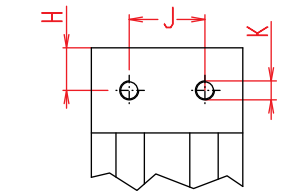

Increasing the carriage length will increase the basic length by the same amount.

Dimensions (mm)

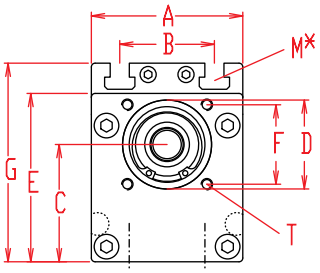

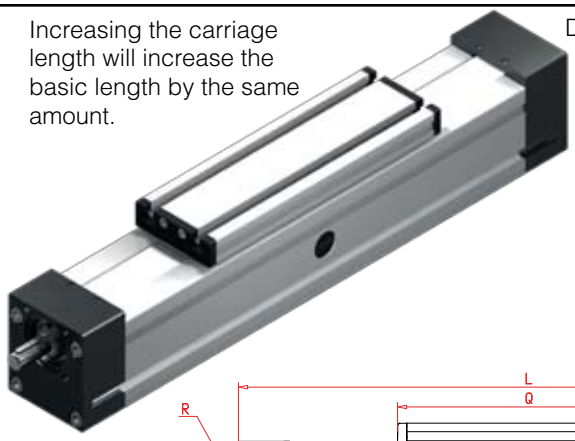

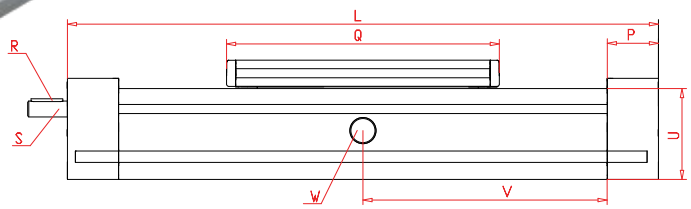

*For slide nuts refer to accessory section V = Q + 100 mm W = servicing position

Size	Basic length L	A	B	C	D	E	F ⊠	G	H	J	K	M for	P	Q	Shaft R Key	Shaft S Øh6x length	T for	U	Basic weight	Weight per 100 mm
QST/K 60	270	60	36	45	37	67	32	79	19	18	M6	M6	38	188	3x3x25	10h6x27	M5	60	4,1 kg	0,5 kg
QST/K 80	350	80	50	62	47	89	42	106	22,5	40	M10	M8	45	250	5x5x28	14h6x35	M6	80	7,5 kg	0,9 kg
QST/K 100	410	100	66	75	68	112	60	129	28,5	50	M10	M10	57	288	6x6x40	22h6x45	M8	100	14,8 kg	1,3 kg

K **Spindle:**
(T) Acme thread **(K)** Ballscrew

1 **Selection of screw:**
(1) right hand (Standard) **(2)** left hand (Ballscrew by inquiry)

0 **Choice of carriage**

(0)

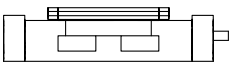

(1)

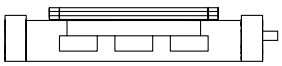

Size	Carriage version 1 Q	Carriage version 1 Basic length L
60	255	350
80	336	436
100	383	510

0 **Choice of journal:**
(0) one shaft (locating bearing side) **(1)** one shaft (non-locating bearing side) **(2)** shaft on both sides

0 **Selection of screw:**

Size	Standard	Multistart screw	Standard	Multistart screw	
	Acme thread		ballscrew		
60	**(0)** Tr 18x4	**(1)** Tr 18x8	**(0)** Kg 16x5	**(1)** Kg 16x10	**(2)** Kg 16x16
80	**(0)** Tr 24x5	**(1)** Tr 24x10	**(0)** Kg 25x5	**(1)** Kg 20x20	**(2)** Kg 25x10
100	**(0)** Tr 32x6	**(1)** Tr 32x12	**(0)** Kg 32x5	**(1)** Kg 32x10	**(2)** Kg 32x32 *

* = Basic and carriage length (L and Q) increase over 47 mm

0 **Ballscrew pitch accuracy:**
(0) 0,1 mm / 300 mm (Standard) **(1)** 0,05 mm / 300 mm **(2)** 0,025 mm / 300 mm

0 **End play of ball nut:**
(0) 0,04 mm (Standard) **(1)*** < 0,02 mm **(2)*** 2% apply prestress
* only in combination with **pitch accuracy (1)** or **(2)**

1500 Basic Length + Stroke + Overtravel** = total length
**Minimum 25mm on each end

QS	K	80	1	0	0	0	0	0	0	01500
		Pos.	1	2	3	4	5	6	7	

Sample ordering code:
QSK80, ballscrew right hand thread, standard carriage, one shaft (locating bearing side), spindle 25x5, 1150 mm stroke.

Modular Linear Actuator
QST/K 60, 80, 100

Dimensions (mm)

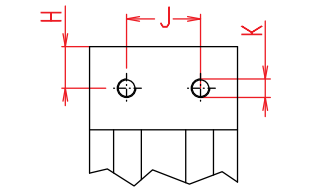

Increasing the carriage length will increase the basic length by the same amount.

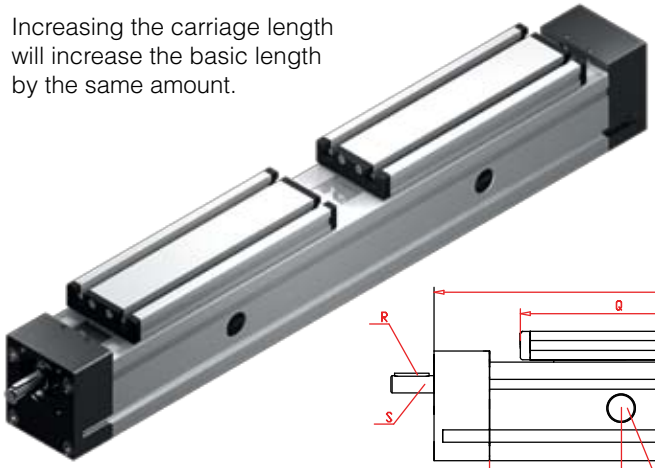

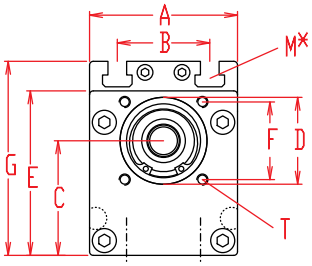

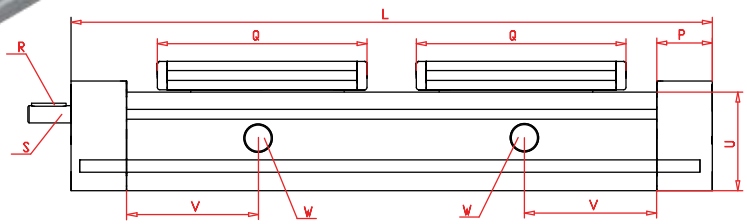

*For slide nuts refer to accessory section V = Q + 100 mm W = servicing position

Size	Basic length L selection of screw 3	Basic length L selection of screw 4	A	B	C	D	E	F ⊠	G	H	J	K	M for	P	Q	Shaft R Key	Shaft S Øh6x length	T for	U	Basic weight	Weight per 100 mm
QST/K 60	460	500	60	36	45	37	67	32	79	19	18	M6	M6	38	188	3x3x25	10h6x27	M5	60	5,4 kg	0,5 kg
QST/K 80	600	640	80	50	62	47	89	42	106	22,5	40	M10	M8	45	250	5x5x28	14h6x35	M6	80	9,8 kg	0,9 kg
QST/K 100	700	740	100	66	75	68	112	60	129	28,5	50	M10	M10	57	288	6x6x40	22h6x45	M8	100	18,6 kg	1,3 kg

K **Spindle:**
(T) Accessory thread **(K)** Ballscrew

3 **Selection of screw:**
(3) right - left hand **(4)** divided spindle

0 **Choice of carriage**

(0)

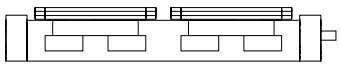

(1)

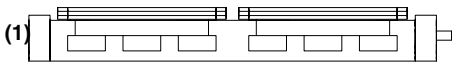

Size	Carriage version 1 Q	Basic length L selection of spindle 3	Basic length L selection of spindle 4
60	255	590	630
80	336	770	810
100	383	890	930

0 **Choice of journal:**
(0) shaft right hand thread **(1)** shaft left hand thread **(2)** shaft on both sides

0

Selection of screw:	Size	Standard	Multistart screw	
Ballscrew right hand	60	**(0)** 16x5	**(1)** 16x10*	**(2)** 16x16*
	80	**(0)** 25x5	**(1)** 20x20*	**(2)** 25x10*
	100	**(0)** 32x5	**(1)** 32x10*	**(2)** 32x32**
Ballscrew left hand	upon request			
Acme right hand thread	60	**(0)** 18x4	**(1)** 18x8	
	80	**(0)** 24x5	**(1)** 24x10	
	100	**(0)** 32x6	**(1)** 32x12	
Acme left hand thread	60	**(0)** 18x4	**(1)** 18x8	
	80	**(0)** 24x5	**(1)** 24x10	
	100	**(0)** 32x6	**(1)** 32x12	

* = only for selection of divided spindle,
** = only for selection of divided spindle, Basic and carriage length (L and Q) increase over 94 mm

0 **Ballscrew pitch accuracy:**
(0) 0,1 mm / 300 mm (Standard) **(1)** 0,05 mm / 300 mm **(2)** 0,025 mm / 300 mm

0 **End play of ball nut:**
(0) 0,04 mm (Standard) **(1)*** < 0,02 mm **(2)*** 2% apply prestress
* only in combination with **pitch accuracy (1)** or **(2)**

1500 Basic Length + Stroke + Overtravel** = total length
**Minimum 25mm on each end

QS	K	80	3	0	0	0	0	0	0	01500
		Pos.	1	2	3	4	5	6	7	

Sample ordering code:
QSK80, ballscrew right - left hand thread, standard carriage, shaft on right hand thread, spindle 25x5, 860 mm stroke.

nookindustries.com toll-free 1 (800) 321-7800
www.nookindustries.ru (499) 703 35 98 sell@nookindustries.ru

Possible Combinations and Mounting Styles QST/K

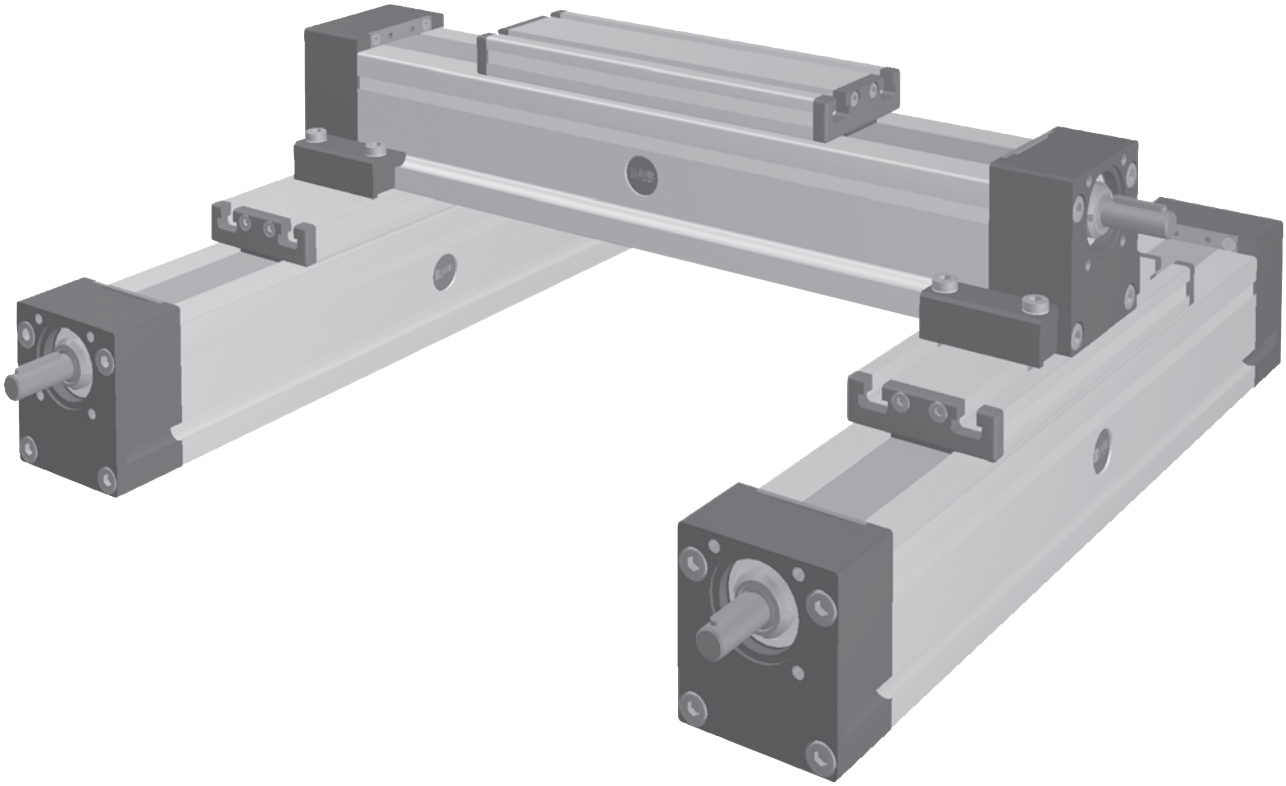

Modular Linear Actuator
QSR 60, 80, 100

Rail guide **Specifications**

Function:
This unit consists of a square aluminium profile with an integrated ball rail. This unit can be driven by a pneumatic cylinder or other additional drives or it serves as a load carrying slide unit.

Fitting position: As required. Max. length 6.000 mm without joints.
Carriage mounting: By T-slots.
Unit mounting: By T-slots and mounting sets. The linear axis can be combined with any T-slot profile.
Carriage support: In the standard version, the carriage runs on two runner blocks which can be adjusted and serviced at a central servicing position. For longer carriages the number of runner blocks can be increased.

Forces and torques

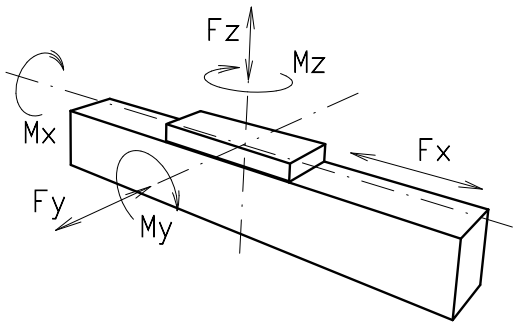

Size	60		80		100	
permitted dyn. forces*	5000 km	10000 km	5000 km	10000 km	5000 km	10000 km
F_x (N)	-	-	-	-	-	-
F_y (N)	1410	990	3570	2550	4080	2900
F_z (N)	3520	2500	8500	6050	10300	7270
M_x (Nm)	33	23	107	75	142	101
M_y (Nm)	104	73	310	222	439	311
M_z (Nm)	100	70	296	210	412	292
C (N)	7800		18800		22800	

All forces and torques related to the following:

existing values / table values

$$\frac{Fy}{Fy_{dyn}} + \frac{Fz}{Fz_{dyn}} + \frac{Mx}{Mx_{dyn}} + \frac{My}{My_{dyn}} + \frac{Mz}{Mz_{dyn}} \leq 1$$

Speed			
(m/sec) max	5	5	5
Geometrical moments of inertia of aluminium profile			
I_x mm^4	$4{,}3 \times 10^5$	$16{,}5 \times 10^5$	$43{,}0 \times 10^5$
I_y mm^4	$4{,}8 \times 10^5$	$18{,}7 \times 10^5$	$48{,}8 \times 10^5$
Elastic modulus N/mm^2	70000	70000	70000

* referred to life-time

Formula: QSR

Deflection:

$$f = \frac{F*L^3}{E*I*192}$$

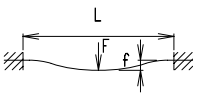

f = deflection (mm)
F = load (N)
L = free length (mm)
E = elastic modulus 70000(N/mm^2)
I = second moment of area (mm^4)

Nominal lifetime:

$$L = \left(\frac{C}{F}\right)^3 x10^5$$

L = Lifetime in meters
C = Dynamic load factor (N)
F = Medium load (N)

nookindustries.com toll-free 1 (800) 321-7800
www.nookindustries.ru (499) 703 35 98 sell@nookindustries.ru

Modular Linear Actuator
QSR 60, 80, 100

Dimensions (mm)

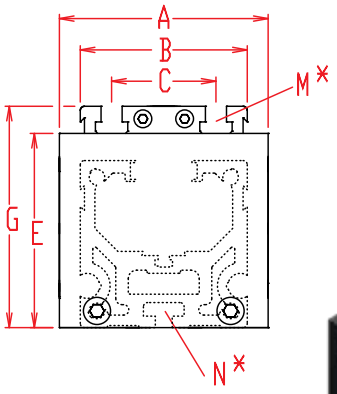

Increasing the carriage length will increase the basic length by the same amount.

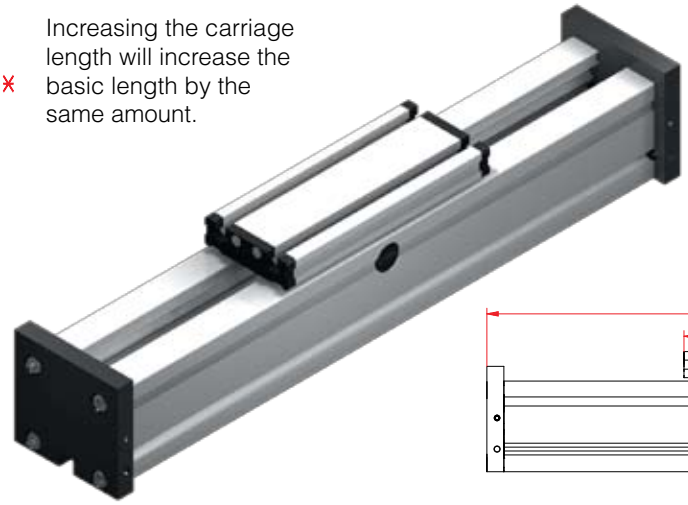

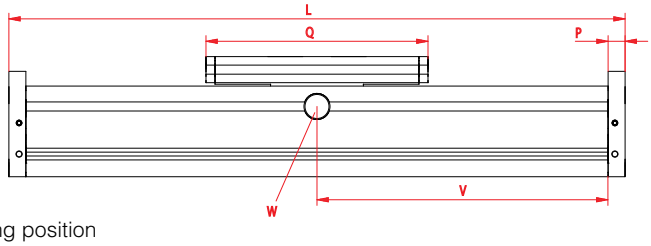

*For slide nuts refer to acessory section V = Q + 100 mm W = servicing position

Size	Basic length L	A	B	C	E	G	N for	M for	P	Q	Basic weight	Weight per 100 mm
QSR 60	205	80	60	36	60	79	M 5	M 6	12	177	1,8 kg	0,50 kg
QSR 80	270	100	80	50	93	106	M 6	M 8	17	232	4,9 kg	0,96 kg
QSR 100	315	130	100	66	110	129	M 10	M 10	20	268	8,2 kg	1,71 kg

Choice of guide body profile:
0 **(0)** Standard **(1)** stainless screws

Choice of carriages:

0

(0)

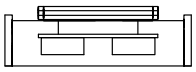

(1)

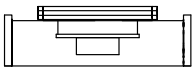

Size	Version 0		Version 1	
	Q	L	Q	L
60	177	205	152	180
80	232	270	196	240
100	268	315	260	310

1500

Basic Length + Stroke + Overtravel** = total length
**Minimum 25mm on each end

QSR	80	0	0	0	0	0	0	0	01500
	Pos.	1	2	3	4	5	6	7	

For additional accessories refer to accessory section

Sample ordering code:
QSR80 with standard body profile, standard carriage and 1230 mm stroke

Modular Linear Actuator
QSSR 60, 80, 100

Rail Guide **Specifications**

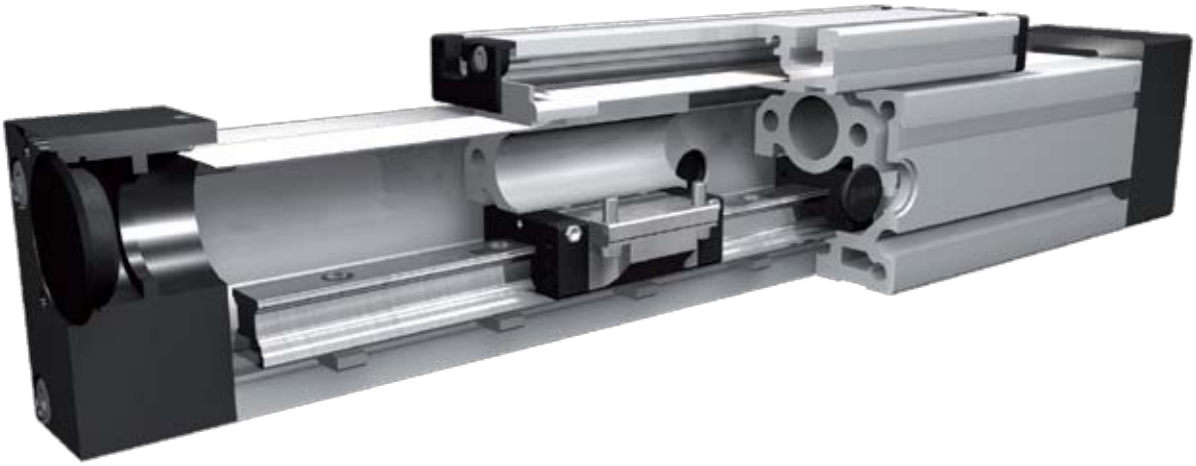

Function:
This unit consists of a square aluminium profile with an integrated ball rail. The carriage is with leading nut and without drive. The openings of the guide body are covered by a stainless steel cover band to protect the system from splash water and dust.

Fitting position: As required, max. length 6.000mm
Carriage connection: By T-slots
Unit mounting: By half round slots and tapped holes in the bearing blocks, mounting sets

Forces and torques

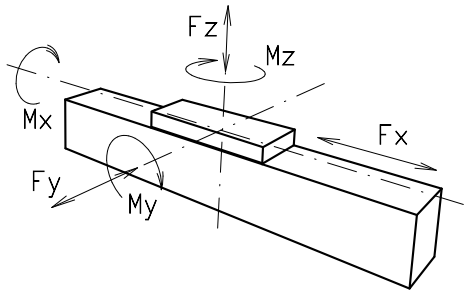

Size	QSSR 60		QSSR 80		QSSR 100	
permitted dyn. forces*	5000 km	10000 km	5000 km	10000 km	5000 km	10000 km
F_y (N)	1410	990	3570	2550	4080	2900
F_z (N)	3520	2500	8500	6050	10300	7270
M_x (Nm)	33	23	107	75	142	101
M_y (Nm)	190	143	604	430	838	597
M_z (Nm)	176	125	550	392	745	532
C (N)	7800		18800		22800	

All forces and torques related to the following:

existing values / table values

$$\frac{Fy}{Fy_{dyn}} + \frac{Fz}{Fz_{dyn}} + \frac{Mx}{Mx_{dyn}} + \frac{My}{My_{dyn}} + \frac{Mz}{Mz_{dyn}} \leq 1$$

Geometrical moments of inertia of aluminium profile			
I_x mm^4	$4{,}3 \times 10^5$	$14{,}0 \times 10^5$	$43{,}0 \times 10^5$
I_y mm^4	$4{,}8 \times 10^5$	$16{,}6 \times 10^5$	$48{,}8 \times 10^5$
E-Modulus N/mm^2	70000	70000	70000

* referred to life-time

Formula: QSSR

Deflection:

$$f = \frac{F*L^3}{E*I*192}$$

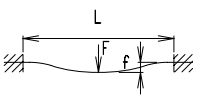

f = deflection (mm)
F = load (N)
L = free length (mm)
E = elastic modulus 70000 (N/mm^2)
I = second moment of area (mm^4)

Nominal lifetime:

$$L = \left(\frac{C}{F}\right)^3 x10^5$$

L = Lifetime in meters
C = Dynamic load factor (N)
F = Medium load (N)

nookindustries.com toll-free 1 (800) 321-7800
www.nookindustries.ru (499) 703 35 98 sell@nookindustries.ru

Modular Linear Actuator
QSSR 60, 80, 100

Dimensions (mm)

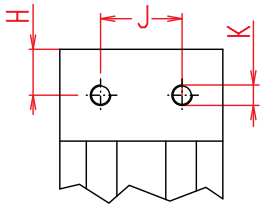

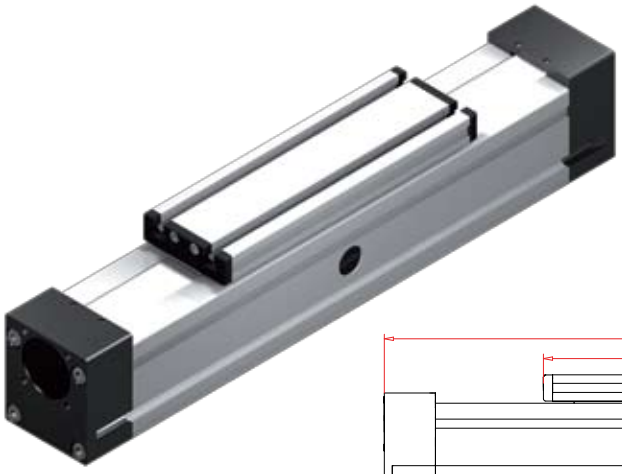

Increasing the carriage length will increase the basic length by the same amount.

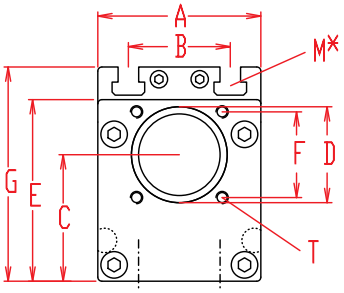

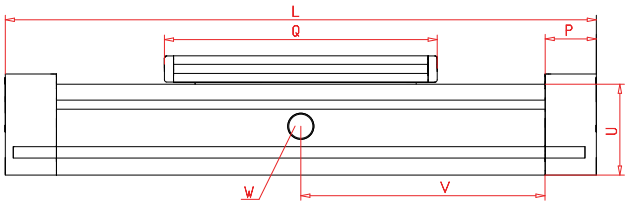

*For slide nuts refer to accessory section V = Q + 100 mm W = servicing position

Size	Basic length L	A	B	C	D	E	F ⊠	G	H	J	K	M for	P	Q	T for	U	Basic weight	Weight per 100 mm
QSSR 60	270	60	36	45	37	67	32	79	19	18	M6	M6	38	188	M5	60	3,1 kg	0,3 kg
QSSR 80	350	80	50	62	47	89	42	106	22,5	40	M10	M8	45	250	M6	80	5,7 kg	0,8 kg
QSSR 100	410	100	66	75	68	112	60	129	28,5	50	M10	M10	57	288	M8	100	10,2 kg	1,2 kg

0 **Choice of carriage**

(0)

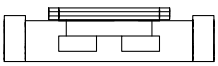

(1)

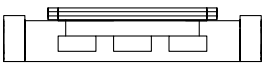

Size	Carriage version 1	
	Q	Basic length L
60	255	350
80	336	436
100	383	510

QSSR	80	1	0	0	0	0	0	0	01500
	Pos. 1	2	3	4	5	6	7		

1500

Basic Length + Stroke + Overtravel** = total length
**Minimum 25mm on each end

Sample ordering code:
QSSR80, standard carriage, 1150 mm stroke.

Possible Mounting Styles

QST/K 80

QS Drives

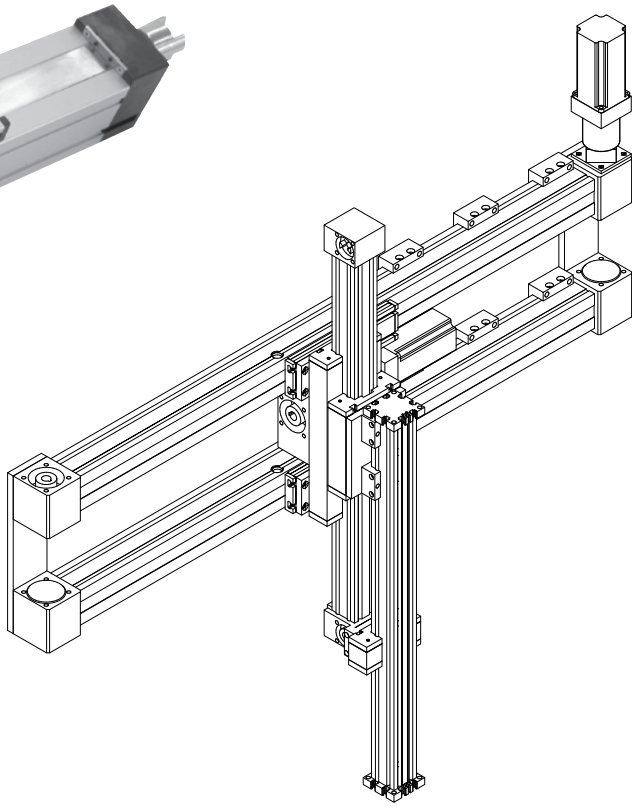

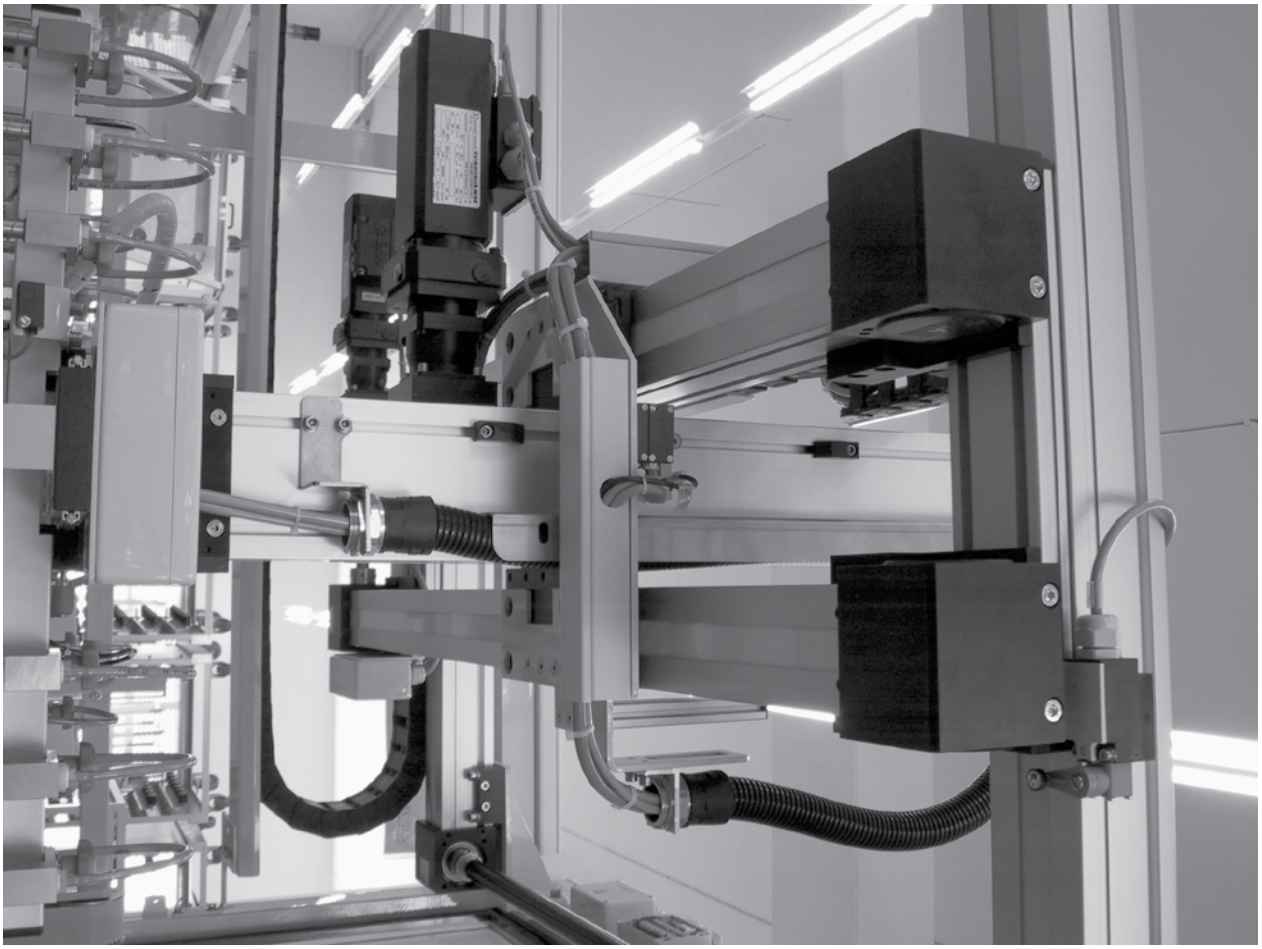

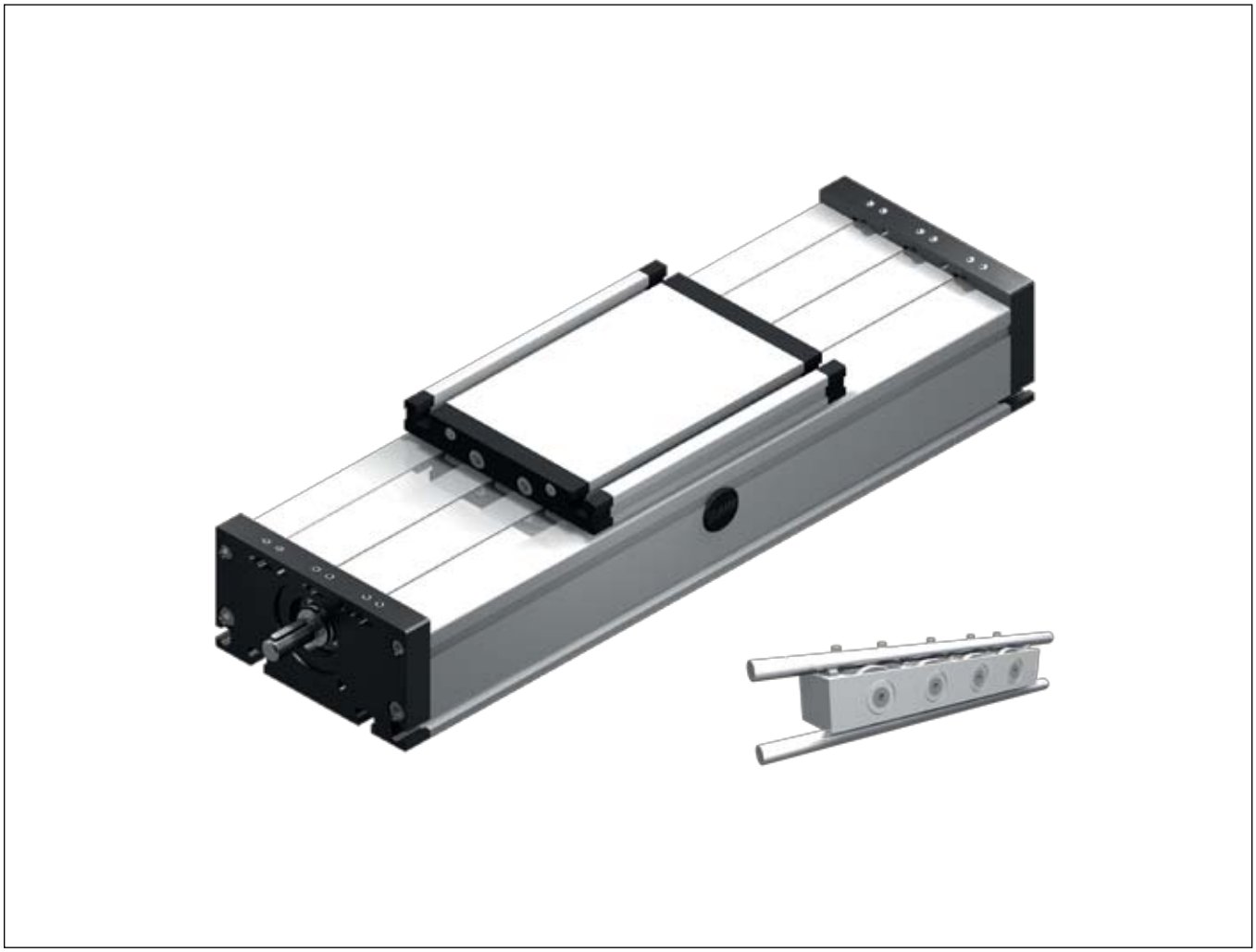

Roller Guide
Modular Linear Actuators
DL

Modular Linear Actuator
DLT/DLK 120, 160, 200

Acme or Ball Screw Drives

Specifications

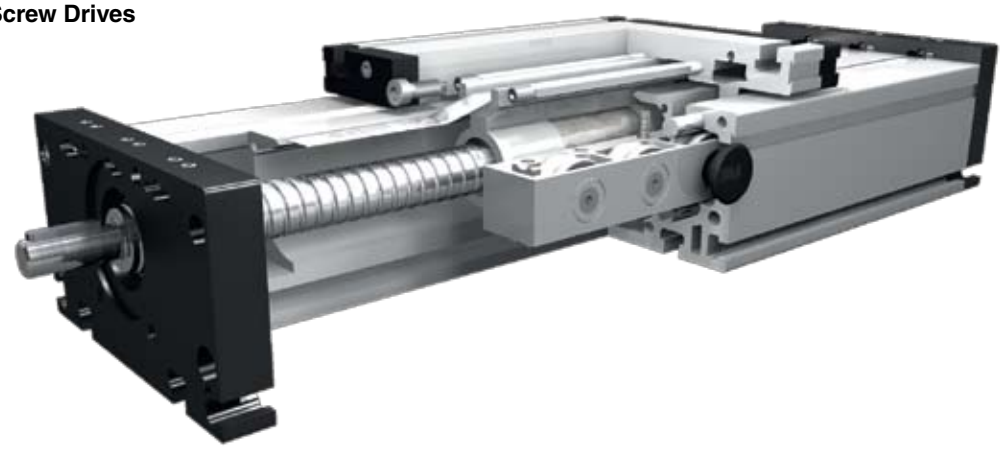

Function:
This unit consists of a rectangular aluminium profile with 2 integrated roller guides. The carriage is driven by means of a rotating screw with leading nut. Where two parallel linear units are used or where two carriages are mounted on one unit, the leading-nut receiver can be used to adjust the symmetry of the carriages. The openings of the guide body are sealed with 3 stainless steel cover bands to protect the drive from splash water and dust.

Fitting position: As required. Max. length 3.000 mm without joints.
Carriage mounting: By T-slots.
Unit mounting: By T-slots and mounting sets. The linear axis can be combined with any T-slot profile.
Carriage support: In the standard version, the carriage runs on 8 rollers which can be adjusted and serviced at a central servicing position. For longer carriages the number of rollers can be increased. Repeatability ballscrew ± 0,025 mm, acme thread ± 0,2 mm.

Forces and torques

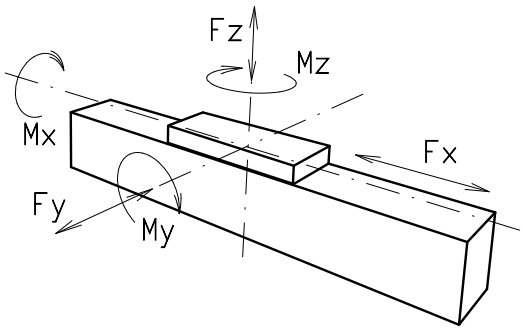

Size	120		160		200	
Forces/Torques	static	dynamic	static	dynamic	static	dynamic
F_x (N)	900	800	5000	4000	10000	8000
F_y (N)	1100	900	3000	2000	4400	3100
F_z (N)	1250	1000	3500	2800	4900	4400
M_x (Nm)	150	125	400	320	600	510
M_y (Nm)	140	120	360	300	560	480
M_z (Nm)	100	90	180	150	310	275
All forces and torques related to the following:						
existing values / table values	$\frac{Fy}{Fy_{dyn}} + \frac{Fz}{Fz_{dyn}} + \frac{Mx}{Mx_{dyn}} + \frac{My}{My_{dyn}} + \frac{Mz}{Mz_{dyn}} \leq 1$					
No-load torque						
Acme thread	18 x 4	18 x 8	24 x 5	24 x 10	32 x 6	32 x 12
(Nm)	0,6	0,9	0,6	0,9	0,9	1,1
Ballscrew	16 x 5	16 x 10	25 x 5	20 x 20	32 x 5	32 x 10
(Nm)	0,5	0,8	0,5	0,8	0,7	0,9
Geometrical moments of inertia of aluminium profile						
I_x mm^4	$6{,}6 \times 10^5$		$22{,}2 \times 10^5$		$63{,}8 \times 10^5$	
I_y mm^4	$38{,}6 \times 10^5$		$122{,}0 \times 10^5$		$335{,}0 \times 10^5$	
Elastic modulus N/mm^2	70000		70000		70000	

Formula: DLT/K
Driving torque:

$$M_a = \frac{F*P*S_i}{2000*\pi*\mu} + M_{leer}$$

$$P_a = \frac{M_a*n}{9550}$$

F	= force	(N)
P	= thread pitch	(mm)
S_i	= safety factor 1,2 ... 2	
M_{leer}	= no-load torque	(Nm)
n	= rpm of screw	(min^{-1})
M_a	= driving torque	(Nm)
μ	= screw efficiency	
P_a	= motor power	(KW)

Efficiency of lead screws:

All ballscrew 0.900

Tr 18x4	0,399
Tr 18x8	0,565
Tr 24x5	0,384
Tr 24x10	0,550
Tr 32x6	0,360
Tr 32x12	0,524

$$f = \frac{F*L^3}{E*I*192}$$

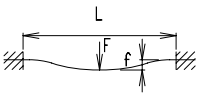

f	= deflection	(mm)
F	= load	(N)
L	= free length	(mm)
E	= elastic modulus 70000	(N/mm^2)
I	= second moment of area	(mm^4)

For the diagram for critical speeds of lead screws refer to the end of the catalog.

nookindustries.com toll-free 1 (800) 321-7800
www.nookindustries.ru (499) 703 35 98 sell@nookindustries.ru

Modular Linear Actuator DLT/DLK 120, 160, 200

Dimensions (mm)

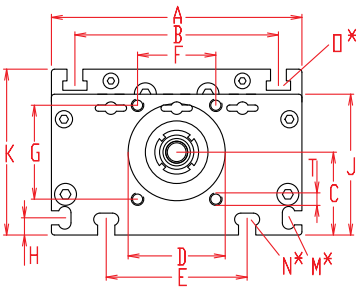

Increasing the carriage length will increase the basic length by the same amount.

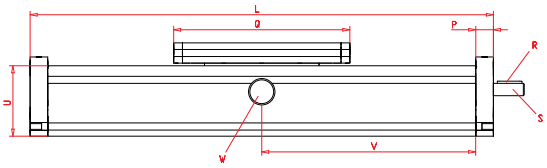

*For slide nuts refer to accessory section V = Q + 100 mm W = servicing position

Size	Basic length L	A	B	C	D	E	F	G	H	J	K	M for	N for	O for	P	Q	Shaft R Key	Shaft S Ø x length	T	U	Basic weight	Weight per 100 mm
DL 120	200	120	96	39	47	78	42	42	10	68	79	M 5	M 6	M 6	15	156	3x3x25	10 h6 x 27	M 6	60	3,9 kg	0,92 kg
DL 160	260	160	130	53	62	90	50	60	11	90	106	M 6	M 8	M 8	20	200	5x5x28	14 h6 x 35	M 8	80	8,2 kg	1,96 kg
DL 200	320	200	160	66	68	140	60	60	15	110	129	M 8	M10	M10	20	270	6x6x40	22 h6 x 45	M 8	100	19,6 kg	2,82 kg

Spindle:
T **(T)** Acme screw **(K)** Ballscrew

Selection of screw:
1 **(1)** right hand **(2)** left hand (Ballscrew by inquiry)

Choice of guide body profile:
0

(0)
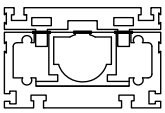
internal profile with cover bands

(3)

with bellows

Stainless versions upon request.

Choice of carriages:
0

(0)
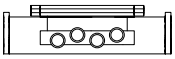

(2)
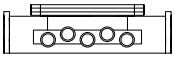

(3)
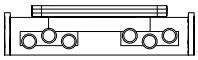

Size	Version 0 Q	Version 0 L	Version 2 Q	Version 2 L	Version 3 Q	Version 3 L
120	156	200	196	240	>236	>280
160	200	260	250	310	>300	>360
200	270	320	330	380	>410	>460

Choice of journal:
0 **(0)** one shaft (locating bearing side) **(1)** one shaft (non-locating bearing side) **(2)** shaft on both sides

Selection of screw:	**Size**	**Standard**	**Multistart screw**
Ballscrew right hand	120	**(0)** 16x5	**(1)** 16x10 **(2)** 16x16 **(3)** 20x20 **(4)** 25x5 **(5)** 25x10
	160	**(0)** 25x5	**(1)** 20x20 **(2)** 25x10 **(3)** 25x25
	200	**(0)** 32x5	**(1)** 32x10 **(2)** 32x20 **(3)** 32x32
Ballscrew left hand	upon request		
0 Acme right hand thread	120	**(0)** 18x4	**(1)** 18x8
	160	**(0)** 24x5	**(1)** 24x10
	200	**(0)** 32x6	**(1)** 32x12
Acme left hand thread	120	**(0)** 18x4	**(1)** 18x8
	160	**(0)** 24x5	**(1)** 24x10
	200	**(0)** 32x6	**(1)** 32x12

Ballscrew pitch accuracy:
0 **(0)** 0,1 mm / 300 mm (Standard) **(1)** 0,05 mm / 300 mm **(2)** 0,025 mm / 300 mm

End play of ball nut:
0 **(0)** 0,04 mm (Standard), **(1)*** < 0,02 mm, **(2)*** 2% apply prestress
* only in combination with **pitch accuracy (1)** or **(2)**

Repeatability:
± 0,2 mm Acme
± 0,025 mm Ballscrew

1500 Basic Length + Stroke + Overtravel** = total length
**Minimum 25mm on each end

DL	T	160	1	0	0	0	0	0	0	01500
		Pos.	1	2	3	4	5	6	7	

Inductive proximity switch sets, which can be mounted inside of the square profile, are available as accessories. Coupling and a special plug are mounted from the outside. For additional accessories refer to chapter 2.2 – 4.2.

Sample ordering code:
DLT160, Acme right hand thread, with internal profile and cover bands, standard carriage, one shaft, spindle 24x5, 1240 mm stroke.

Modular Linear Actuator
DLT/DLK 120, 160, 200

With Acme Thread Or Ballscrew, Right-Hand And Left-Hand Thread Or Divided Spindles

Dimensions (mm)

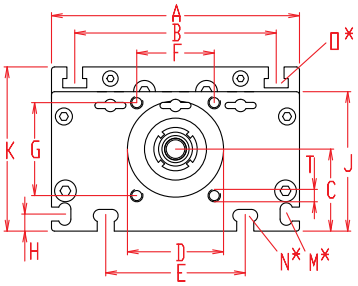

Increasing the carriage length will increase the basic length by the same amount.

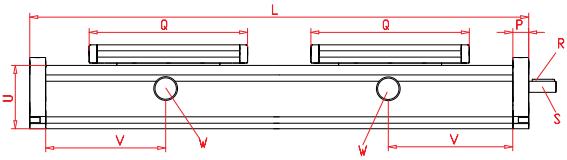

*For slide nuts refer to accessory section V = Q + 100 mm W = servicing position

Size	Basic length L	A	B	C	D	E	F	G	H	J	K	M for	N for	O for	P	Q	Shaft R Key	Shaft S Ø x length	T	U	Basic weight	Weight per 100 mm
DL 120	360	120	96	39	47	78	42	42	10	68	79	M 5	M 6	M 6	15	156	3x3x25	10 h6 x 27	M 6	60	5,1 kg	0,92 kg
DL 160	470	160	130	53	62	90	50	60	11	90	106	M 6	M 8	M 8	20	200	5x5x28	14 h6 x 35	M 8	80	12,0 kg	1,96 kg
DL 200	600	200	160	66	68	140	60	60	15	110	129	M 8	M10	M10	20	270	6x6x40	22 h6 x 45	M 8	100	27,1 kg	2,82 kg

Spindle:
T **(T)** Acme screw **(K)** Ballscrew

Selection of screw:
3 **(3)** right - left hand **(4)** divided spindle

Choice of guide body profile:
0

(0) 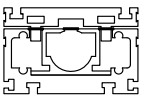
internal profile with cover bands

(3)
with bellows

Stainless versions upon request.

Choice of carriages:
0

(0) 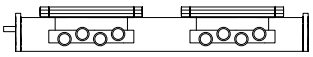
(2) 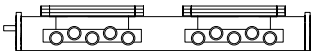
(3) 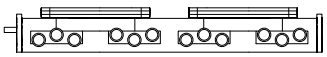

Size	Version 0 Q	Version 0 L	Version 2 Q	Version 2 L	Version 3 Q	Version 3 L
120	156	360	196	440	>236	>530
160	200	470	250	570	>300	>670
200	270	600	330	720	>410	>880

Choice of journal:
0 **(0)** shaft right hand thread **(1)** shaft left hand thread **(2)** shaft on both sides

Selection of screw:	Size	Standard	Multistart screw
Ballscrew right hand	120	**(0)** 16x5	**(1)** 16x10* **(2)** 16x16* **(3)** 20x20* **(4)** 25x5* **(5)** 25x10*
	160	**(0)** 25x5	**(1)** 20x20* **(2)** 25x10* **(3)** 25x25*
	200	**(0)** 32x5	**(1)** 32x10* **(2)** 32x20* **(3)** 32x32*
Ballscrew left hand	upon request		
0 Acme right hand thread	120	**(0)** 18x4	**(1)** 18x8
	160	**(0)** 24x5	**(1)** 24x10
	200	**(0)** 32x6	**(1)** 32x12
Acme left hand thread	120	**(0)** 18x4	**(1)** 18x8
	160	**(0)** 24x5	**(1)** 24x10
	200	**(0)** 32x6	**(1)** 32x12

* = only for selection of divided spindle

Ballscrew pitch accuracy:
0 **(0)** 0,1 mm / 300 mm (Standard) **(1)** 0,05 mm / 300 mm **(2)** 0,025 mm / 300 mm

End play of ball nut:
0 **(0)** 0,04 mm (Standard), **(1)*** < 0,02 mm, **(2)*** 2% apply prestress
* only in combination with **pitch accuracy (1)** or **(2)**

Repeatability:
± 0,2 mm Acme
± 0,025 mm Ballscrew

1500 Basic Length + Stroke + Overtravel** = total length
**Minimum 25mm on each end

DL	T	160	3	0	0	0	0	0	0	01500
		Pos.	1	2	3	4	5	6	7	

Inductive proximity switch sets, which can be mounted inside of the square profile, are available as accessories. Coupling and a special plug are mounted from the outside.

Sample ordering code:
DLT160, Acme right - left hand thread, with internal profile and cover bands, standard carriage, shaft on the right side, spindle 24x5, 1030 mm stroke

Possible Mounting Styles

DL-Spindle Drives

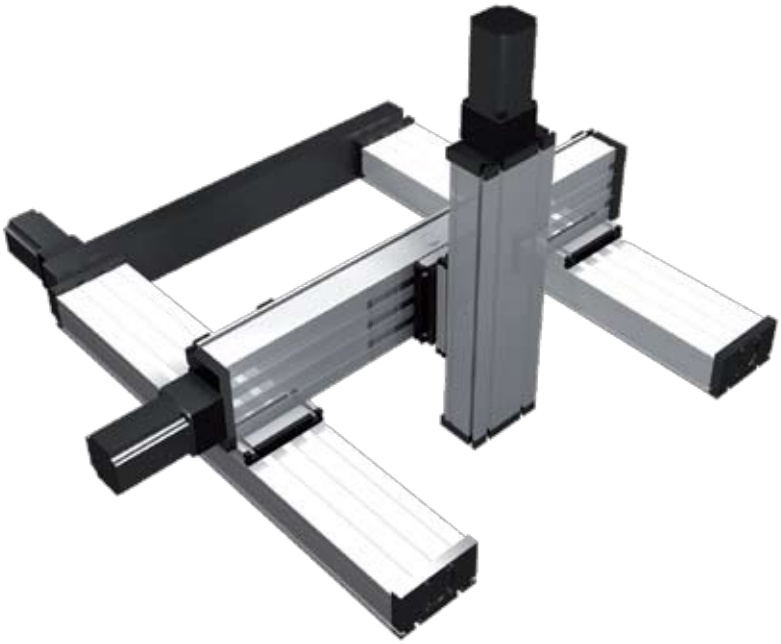

Modular Linear Actuator
DLZ 120, 160, 200

Belt drive **Specifications**

Function:
This unit consists of a rectangular aluminium profile with 2 integrated roller guides. The carriage is moved by a belt drive. Each standard pulley has got one coupling claw on one side. Belt tension can be readjusted by a simple screw adjustment device in the carriage. This device can also be used for symmetrical adjustment of two or more linear units running parallel. The openings of the guide body are sealed with 3 stainless steel cover bands to protect the guide from splash water and dust. Alternatively, the opening can also be covered with a bellow or can be delivered without cover bands.

Fitting position: As required. Max. length 6.000 mm without joints.
Carriage mounting: By T-slots.
Unit mounting: By T-slots and mounting sets. The linear axis can be combined with any T-slot profile.
Belt type: HTD with steel reinforcement, no backlash when changing direction, repeatability ± 0,1 mm.
Carriage support: In the standard version, the carriage runs on 8 rollers which can be adjusted and serviced at a central servicing position. For longer carriages the number of rollers can be increased.

Forces and torques

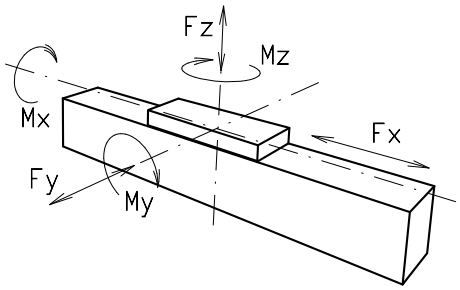

Size	120		160		200	
Forces/Torques	static	dynamic	static	dynamic	static	dynamic.
F_x (N)	894	800	1900	1800	4000	3800
F_y (N)	1100	900	3000	2000	4400	3100
F_z (N)	1250	1000	3500	2800	4900	4400
M_x (Nm)	150	125	400	320	600	510
M_y (Nm)	140	120	360	300	560	480
M_z (Nm)	100	90	180	150	310	275
All forces and torques related to the following:						
existing values / table values	$\frac{Fy}{Fy_{dyn}} + \frac{Fz}{Fz_{dyn}} + \frac{Mx}{Mx_{dyn}} + \frac{My}{My_{dyn}} + \frac{Mz}{Mz_{dyn}} \leq 1$					
No-load torque						
Nm	1,2		1,5		1,8	
Speed						
(m/sec) max	4		6		8	
Tensile force						
permanent (N)	900		1900		4000	
0,2 sec (N)	1000		2090		4300	
Geometrical moments of inertia of aluminium profile						
I_x mm^4	$6{,}6 \times 10^5$		$22{,}2 \times 10^5$		$63{,}8 \times 10^5$	
I_y mm^4	$38{,}6 \times 10^5$		$122{,}0 \times 10^5$		335×10^5	
Elastic modulus N/mm^2	70000		70000		70000	

Formula: DLZ
Driving torque:

$$M_a = \frac{F*P*S_i}{2000*\pi} + M_{leer}$$

$$P_a = \frac{M_a*n}{9550}$$

F	= force	(N)
P	= pulley action perimeter	(mm)
S_i	= safety factor 1,2 ... 2	
M_{leer}	= no-load torque	(Nm)
n	= rpm pulley	(min^{-1})
M_a	= driving torque	(Nm)
P_a	= motor power	(KW)

$$f = \frac{F*L^3}{E*I*192}$$

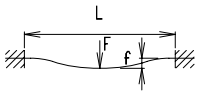

f= deflection	(mm)
F = load	(N)
L= free length	(mm)
E= elastic modulus 70000	(N/mm^2)
I= second moment of area	(mm^4)

nookindustries.com toll-free 1 (800) 321-7800
www.nookindustries.ru (499) 703 35 98 sell@nookindustries.ru

Modular Linear Actuator
DLZ 120, 160, 200

Dimensions (mm)

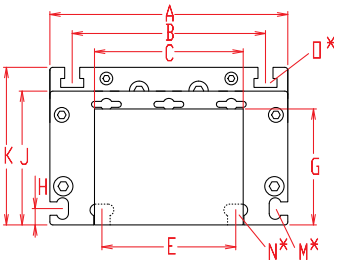

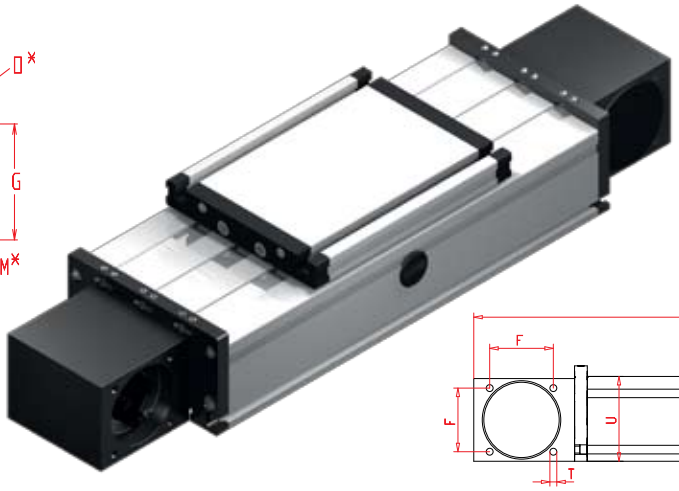

Increasing the carriage length will increase the basic length by the same amount.

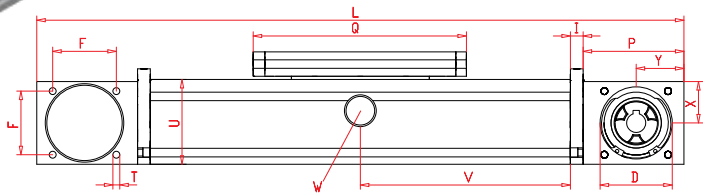

*For slide nuts refer to accessory section V = Q + 100 mm W = servicing position

Size	Basic length L	A	B	C	D	E	F	G	H	I	J	K	M for	N for	O for	P	Q	T	U	X	Y	Basic weight	Weight per 100 mm
DLZ 120	330	120	96	80	47	78	42	60	10	10	68	79	M 5	M 6	M 6	70	156	M 6	60	30	35	5,1 Kg	0,85 Kg
DLZ 160	440	160	130	100	68	90	60	78	11	12	90	106	M 6	M 8	M 8	95	200	M 8	80	39	45	13,0 kg	1,69 kg
DLZ 200	530	200	160	130	90	140	80	97	15	15	110	129	M 8	M10	M10	110	270	M10	100	49	50	23,4 kg	2,33 kg

Choice of guide body profile:

0

(0) 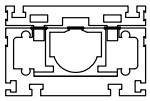
internal profile with cover bands

(1) 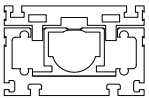
internal profile without cover bands

(2) 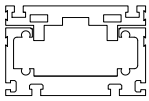
without internal profile and cover bands

(3)
with bellows

Stainless versions upon request.

Choice of carriage:

0

(0) 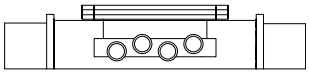

(2) 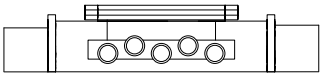

(3) 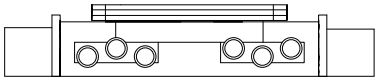

Size	Version 0		Version 2		Version 3	
	Q	L	Q	L	Q	L
120	156	330	196	370	>236	>410
160	200	440	250	490	>300	>540
200	270	530	330	600	>410	>680

Coupling - Selection of shaft mounting:

0

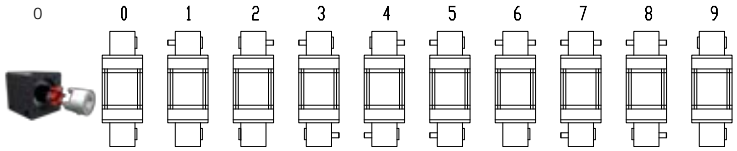

9 is as 0, but with coupling claws on both sides.
The standard version is supplied without shaft. A shaft can be retrofitted by inserting it into the pulley bore and securing it with 2 locking rings or tension sets (size 200).

Belt table

Code No.		Size	Belt	mm/rev.	Number of teeth
0	**4**	120	5M25	130	26
0	**7**	160	8M30	176	22
0	**9**	160	8M50	176	22
0	**9**	200	8M50	224	28
1	**0**	200	8M70	224	28

Shaft dimensions

Size	Shaft ø h6 x length	Key
120	14 x 35	5x5x28
160	18 x 45	6x6x40
160(8M50)	25 x 35	8x8x32
200	22 x 45	6x6x40
200(8M70)	30 x 55	8x7x40

Basic Length + Stroke + Overtravel** = total length
**Minimum 25mm on each end

DLZ	160	1	0	0	0	0	7	1	01500
	Pos.	1	2	3	4	5	6	7	

Inductive proximity switch sets, which can be mounted inside of the square profile, are available as accessories. Coupling and a special plug are mounted from the outside.

Sample ordering code:
DLZ160 with internal profile and cover bands, standard carriage, coupling claw on one side,1060 mm stroke.

Modular Linear Actuator
DLZA 120, 160, 200

Rack and Pinion Drive **Specifications**

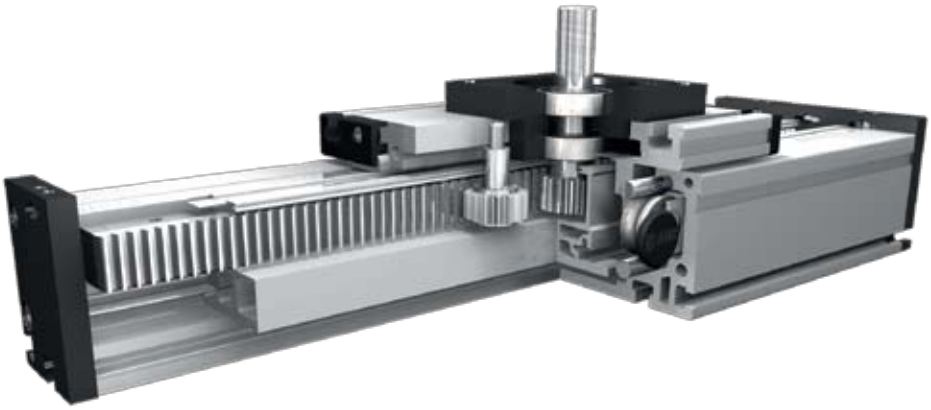

Function:
This unit consists of a rectangular aluminium profile with 2 integrated roller guides. The carriage, which has internal linear ball bearings that can be adjusted free of play, is driven along the guide rods by a high precision rack. The rack and pinion system is suitable for highly dynamic servo operation and ideal for lifting movements. The pinion is equipped with maintenance-free ball bearings. The rack is lubricated by a toothed felt wheel.

Fitting position: As required. Max. length 6.000 mm without joints.
Carriage mounting: By T-slots.
Unit mounting: By T-slots and mounting sets. The linear axis can be combined with any T-slot profile.
Rack: 6h23 Modul 2 (hardened and ground), repeatability ± 0,1 mm.
Carriage support: In the standard version, the carriage runs on 8 rollers which can be adjusted and serviced at a central servicing position. For longer carriages the number of rollers can be increased.

Forces and torques

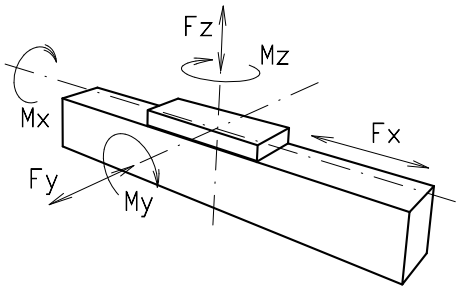

Size	120		160		200	
Forces/Torques	static	dynam.	static	dynam.	static	dynam.
F_x (N)			1900	1800		
F_y (N)			3000	2000		
F_z (N)			3500	2800		
M_x (Nm)			400	320		
M_y (Nm)			360	300		
M_z (Nm)			180	150		
All forces and torques related to the following: existing values / table values $\frac{Fy}{Fy_{dyn}} + \frac{Fz}{Fz_{dyn}} + \frac{Mx}{Mx_{dyn}} + \frac{My}{My_{dyn}} + \frac{Mz}{Mz_{dyn}} \leq 1$						
No-load torque						
Nm			1,5			
Speed						
(m/sec) max			3			
Tensile force						
permanent (N)			1900			
0,2 sec (N)			2090			
Geometrical moments of inertia of aluminium profile						
I_x mm^4			22,2x10^5			
I_y mm^4			122,0x10^5			
Elastic modulus N/mm^2			70000			

Formula: DLZA
Driving torque:

$$M_a = \frac{F*P*S_i}{2000*\pi} + M_{leer}$$

$$P_a = \frac{M_a*n}{9550}$$

F	= force	(N)
P	= pulley action perimeter	(mm)
S_i	= safety factor 1,2 ... 2	
M_{leer}	= no-load torque	(Nm)
n	= rpm pulley	(min^{-1})
M_a	= driving torque	(Nm)
P_a	= motor power	(KW)

$$f = \frac{F*L^3}{E*I*192}$$

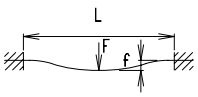

f= deflection	(mm)
F = load	(N)
L= free length	(mm)
E= elastic modulus 70000	(N/mm^2)
I= second moment of area	(mm^4)

nookindustries.com toll-free 1 (800) 321-7800
www.nookindustries.ru (499) 703 35 98 sell@nookindustries.ru

Modular Linear Actuator
DLZA 120, 160, 200

Dimensions (mm)

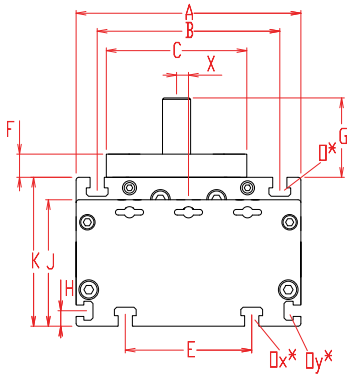

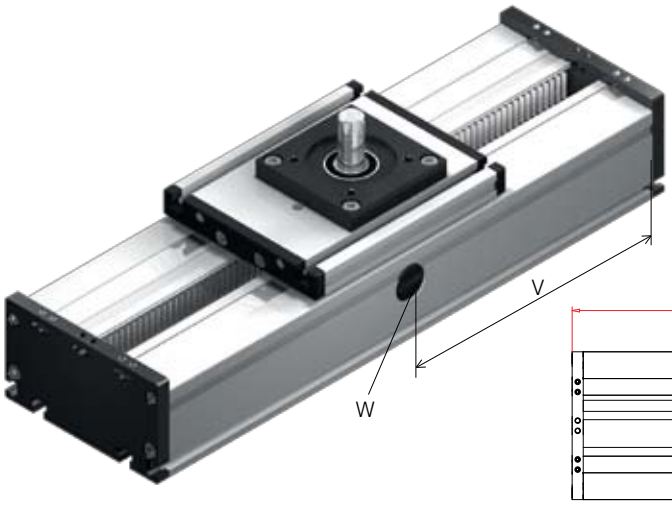

Increasing the carriage length will increase the basic length by the same amount.

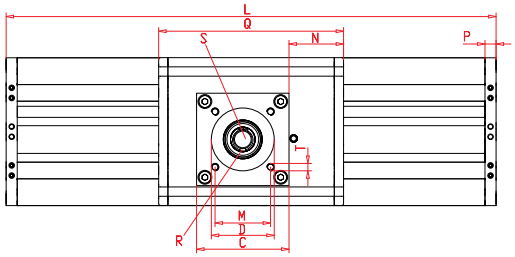

*For slide nuts refer to accessory section V = Q + 100 mm W = servicing position

Size	Basic length L	A	B	C	D	E	F	G	H	J	K	M	N	O for	Ox for	Oy for	P	Q	T for	U	X	Basic weight	Weight per 100 mm
DLZA 120																							
DLZA 160	240	160	130	100	68	90	16,5	56,5	11	90	106	60	59	M 8	M 8	M 6	12	200	M 8	80	8,5	13,0 kg	2,10 kg
DLZA 200																							

Choice of guide body profile:

0

(0)

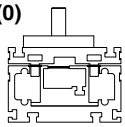

internal profile with cover bands

(1)

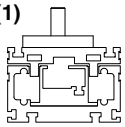

internal profile without cover bands

(2)

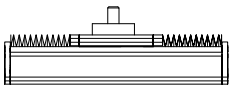

with bellows

Stainless versions upon request.

Choice of carriage:

0

(0)

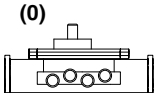

(1)

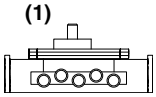

(2)

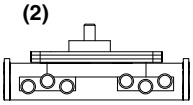

Size ⊠	Version 0		Version 1		Version 2	
	Q	L	Q	L	Q	L
120						
160	200	240	250	290	>300	>340
200						

1

Position of drive:

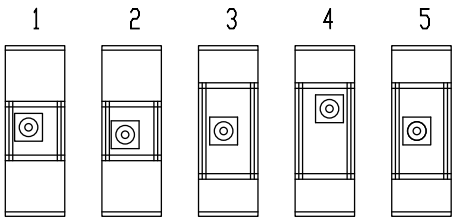

Shaft dimensions

Size ⊠	Shaft ø h6 x length	Key	Pinion	
	S	R	mm/rev.	Modul
120				
160	20 x 40	6x6x35	100,53	2
200				

DLZA	160	1	0	0	1	0	0	1	01500
	Pos.	1	2	3	4	5	6	7	

Basic Length + Stroke + Overtravel** = total length
**Minimum 25mm on each end

Inductive proximity switch sets, which can be mounted inside of the square profile, are available as accessories. Coupling and a special plug are mounted from the outside.

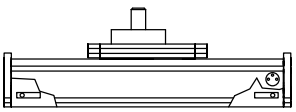

Sample ordering code:
DLZA160 with internal profile and cover bands, standard carriage,1260 mm stroke.

Modular Linear Actuator
DLSZ 120, 160, 200

Belt Drive **Specifications**

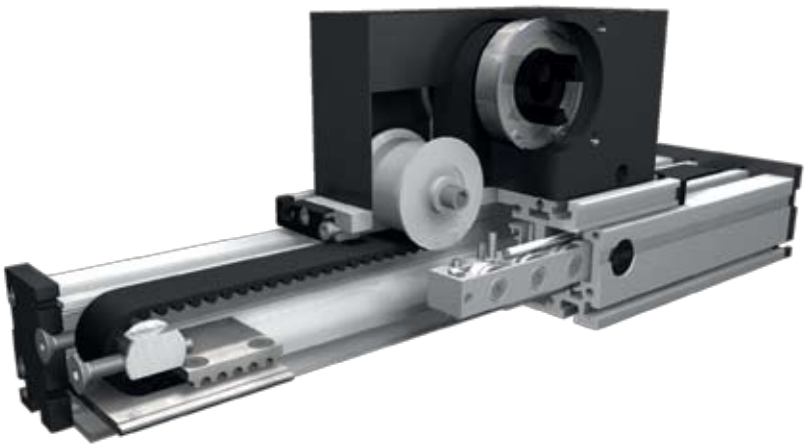

Function:
This linear unit consists of a rectangular aluminium profile with integrated, hardened steel guide rods. The carriage, which has linear ball bearings that can be adjusted free of play, is driven along the guide rods by a timing belt. Each standard pulley includes a coupling claw on one side and is equipped with maintenance-free ball bearings. Belt tension can be readjusted by a simple screw adjustment device in the carriage. This device can also be used for symmetrical adjustment of two or more linear units running parallel.

Fitting position: As required. Max. length 6.000 mm without joints.
Carriage mounting: By T-slots.
Unit mounting: By T-slots and mounting sets. The linear axis can be combined with any T-slot profile.
Belt performance: HTD with steel reinforcement, no backlash when changing direction, repeatability ± 0,1 mm.
Carriage support: In the standard version, the carriage runs on 8 rollers which can be adjusted and serviced at a central servicing position. For longer carriages the number of rollers can be increased.

Forces and torques

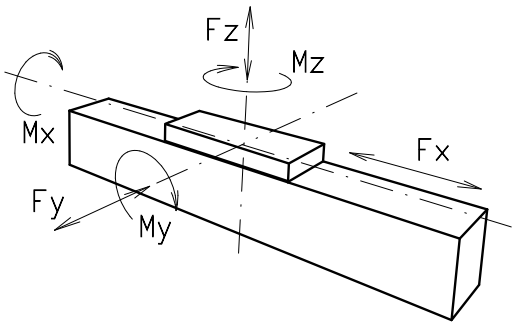

Size	120		160		200	
Forces/Torques	static	dynamic	static	dynamic	static	dynamic
F_x (N)	1900	1800	4000	3800	5900	5750
F_y (N)	1100	900	3000	2000	4400	3100
F_z (N)	1250	1000	3500	2800	4900	4400
M_x (Nm)	150	125	400	320	600	510
M_y (Nm)	140	120	360	300	560	480
M_z (Nm)	100	90	180	150	310	275
All forces and torques related to the following:						
existing values / table values	$\frac{Fy}{Fy_{dyn}} + \frac{Fz}{Fz_{dyn}} + \frac{Mx}{Mx_{dyn}} + \frac{My}{My_{dyn}} + \frac{Mz}{Mz_{dyn}} \leq 1$					
No-load torque						
Nm	1,1		1,5		1,8	
Speed						
(m/sec) max	4		6		8	
Tensile force						
permanent (N)	1900		4000		5900	
0,2 sec (N)	2090		4300		6350	
Geometrical moments of inertia of aluminium profile						
I_x mm^4	$6{,}6 \times 10^5$		$2{,}22 \times 10^6$		$6{,}38 \times 10^6$	
I_y mm^4	$38{,}6 \times 10^5$		$12{,}20 \times 10^6$		$33{,}5 \times 10^6$	
Elastic modulus N/mm^2	70000		70000		70000	

Formula: DLSZ
Driving torque:

$$M_a = \frac{F*P*S_i}{2000*\pi} + M_{leer}$$

$$P_a = \frac{M_a*n}{9550}$$

F	= force	(N)
P	= thread pitch	(mm)
S_i	= safety factor 1,2 ... 2	
M_{leer}	= no-load torque	(Nm)
n	= rpm of screw	(min^{-1})
M_a	= driving torque	(Nm)
P_a	= motor power	(KW)

$$f = \frac{F*L^3}{E*I*192}$$

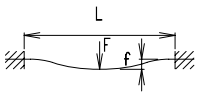

f= deflection	(mm)
F= load	(N)
L= free length	(mm)
E= elastic modulus 70000	(N/mm^2)
I= second moment of area	(mm^4)

nookindustries.com toll-free 1 (800) 321-7800
www.nookindustries.ru (499) 703 35 98 sell@nookindustries.ru

Modular Linear Actuator
DLSZ 120, 160, 200

Dimensions (mm)

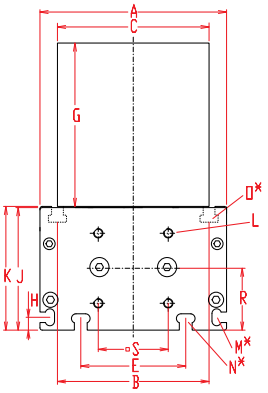

Increasing the carriage length will increase the basic length by the same amount.

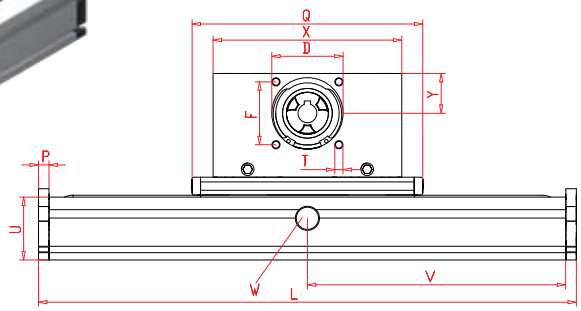

*For slide nuts refer to accessory section V = Q + 100 mm W = servicing position

Size	Basic length L	A	B	C	D	E	F	G	H	J	K	L	M for	N for	O for	P	Q	R	S	T	U	X	Y	Basic weight	Weight per 100 mm
DLSZ 120	230	120	96	100	68	78	60	100	10	78	79	M 6	M 5	M 6	M 6	10	200	39	42	M 8	60	180	39	12,0 kg	1,2 kg
DLSZ 160	330	160	130	130	90	90	80	130	11	105	106	M 8	M 6	M 8	M 8	12	290	53	60	M 10	80	270	60	27,0 kg	1,8 kg
DLSZ 200	380	200	160	160	110	140	100	145	15	128	129	M 10	M 8	M 10	M 10	15	340	69	95	M 10	100	310	62	53,0 kg	2,6 kg

Choice of guide body profile:

1

(1)

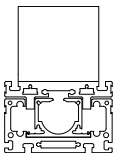

internal profile without cover bands

(2)

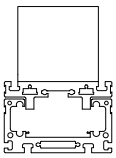

without internal profile and cover bands

(3)

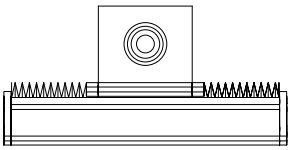

with bellows

Stainless versions upon request.

Choice of carriages:

0

(0)

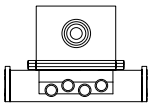

(1)

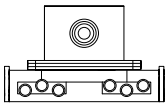

(2)

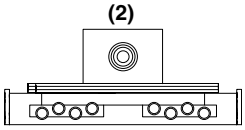

Size	Version 0		Version 1		Version 2	
	Q	L	Q	L	Q	L
120	200	230	>280	>310	>360	>390
160	290	330	>390	>430	>490	>530
200	340	380	>480	>520	>610	>650

Coupling - Selection of shaft mounting:

0

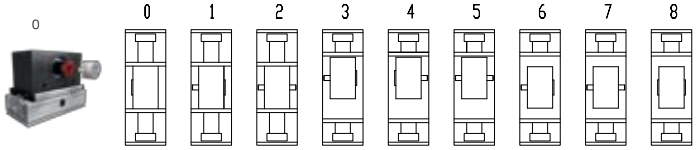

8 is as 0, but with coupling claws on both sides. The standard version is supplied without shaft. A shaft can be retrofitted by inserting it into the pulley bore and securing it with 2 locking rings or tension sets (size 160 and 200).

Belt table

Code No.		Size	Belt	mm/rev.	Number of teeth
0	**7**	120	8M30	192	24
0	**9**	160	8M50	256	32
1	**0**	200	8M70	304	38

Shaft dimensions

Size	Shaft ø h6 x length	Key
120	18 x 45	6x6x40
160	22 x 45	6x6x40
200	30 x 55	8x7x44

DLSZ	120	1	1	0	0	0	7	2	01500
	Pos.	1	2	3	4	5	6	7	

Basic Length + Stroke + Overtravel** = total length
**Minimum 25mm on each end

Inductive proximity switch sets, which can be mounted inside of the square profile, are available as accessories. Coupling and a special plug are mounted from the outside.

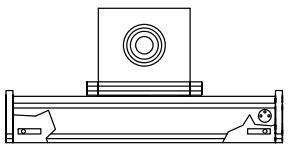

Sample ordering code:
DLSZ120, body profile with internal profile without cover bands, standard carriage, coupling claws on one side, 1270 mm stroke

Possible Mounting Styles

Possible Mounting Styles

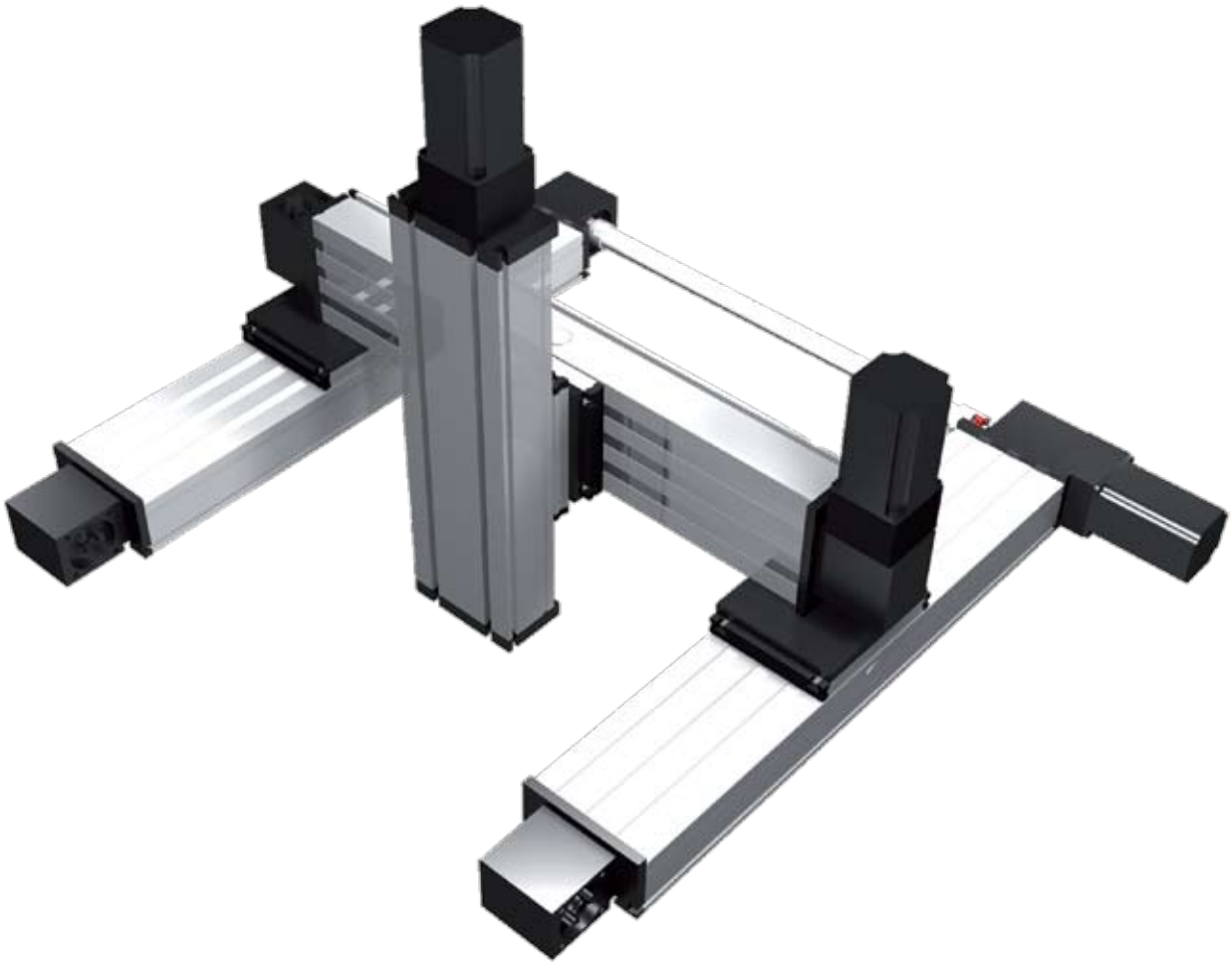

Modular Linear Actuator
DLVZ 120, 160

Internal Belt Drive

Specifications

Function:
This unit consists of a rectangular aluminium profile with 2 integrated roller guides. The carriage is moved by a belt drive. Belt tension can be readjusted by a simple screw adjustment device in the carriage. This device can also be used for symmetrical adjustment of two or more linear units running parallel. The openings of the guide body are sealed with 3 stainless steel cover bands to protect the guide from splash water and dust. Alternatively, the opening can also be covered with a bellow or can be delivered without cover bands.

Fitting position: As required. Max. length 3.000 mm without joints.
Carriage mounting: By T-slots.
Unit mounting: By T-slots and mounting sets. The linear axis can be combined with any T-slot profile.
Belt type: HTD with steel reinforcement, no backlash when changing direction, repeatability ± 0,1 mm.
Carriage support: In the standard version, the carriage runs on 8 rollers which can be adjusted and serviced at a central servicing position. For longer carriages the number of rollers can be increased.

Forces and torques

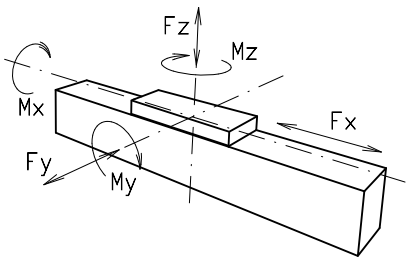

Size	DLVZ 120		DLVZ 160		DLVZ 200	
Forces/Torques	static	dynamic	static	dynamic	static	dynamic
F_x (N)	894	800	1000	840		
F_y (N)	1100	900	3000	2000		
F_z (N)	1250	1000	3500	2800		
M_x (Nm)	150	125	400	320		
M_y (Nm)	140	120	360	300		
M_z (Nm)	100	90	180	150		
All forces and torques relate to the following: existing values / table values $\frac{Fy}{Fy_{dyn}} + \frac{Fz}{Fz_{dyn}} + \frac{Mx}{Mx_{dyn}} + \frac{My}{My_{dyn}} + \frac{Mz}{Mz_{dyn}} \leq 1$						
No-load torque						
Nm	1,4		1,8			
Speed						
(m/sec) max	3		4			
Tensile force						
permanent (N)	900		1000			
0,2 sec (N)	1000		1150			
Geometrical moments of inertia of aluminium profile						
I_x mm^4	6,6x10^5		22,2x10^5			
I_y mm^4	38,6x10^5		122,0x10^5			
E-Modulus N/mm^2	70000		70000			

Formula: DLVZ
Driving torque:

$$M_a = \frac{F*P*S_i}{2000*\pi} + M_{leer}$$

$$P_a = \frac{M_a*n}{9550}$$

F = force (N)
P = pulley action perimeter (mm)
S_i = safety factor 1,2 ... 2
M_{leer} = no-load torque (Nm)
n = rpm pulley (min^{-1})
M_a = driving torque (Nm)
P_a = motor power (KW)

$$f = \frac{F*L^3}{E*I*192}$$

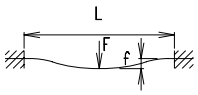

f= deflection (mm)
F = load (N)
L= free length
E= elastic modulus 70000 (N/mm^2)
I= second moment of area (mm^4)

nookindustries.com toll-free 1 (800) 321-7800
www.nookindustries.ru (499) 703 35 98 sell@nookindustries.ru

Modular Linear Actuator
DLVZ 120, 160

Dimensions (mm)

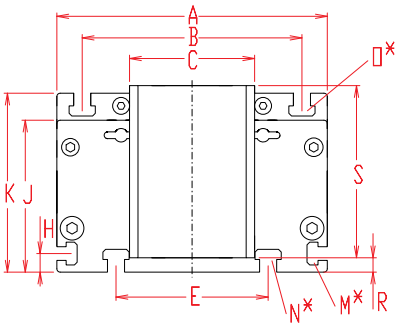

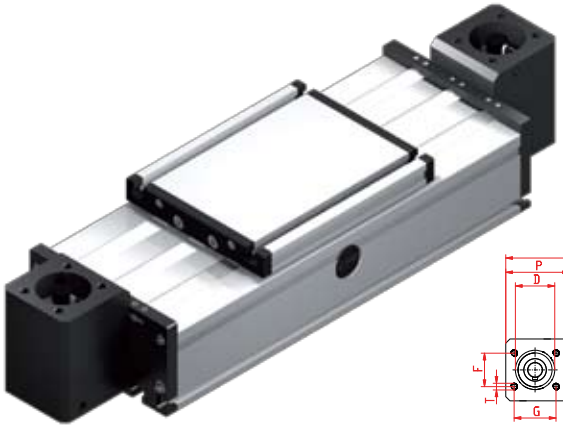

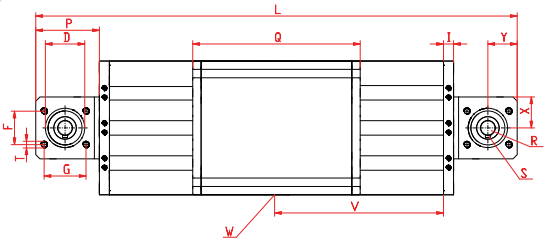

Increasing the carriage length will increase the basic length by the same amount

*For slide nuts refer to accessory section V = Q + 100 mm W = servicing position

Size	Basic length L	A	B	C	D	E	F	G	H	I	J	K	M for	N for	O for	P	Q	R	S	T	U	X	Y	Z	Basic weight	Weight per 100 mm
DLVZ 120	300	120	96	56	37	78	30	36	10	10	68	79	M5	M6	M6	56	156	2,5	82	M6	60	28	24	14	4,62 kg	0,82 kg
DLVZ 160	410	160	130	74	47	90	40	50	11	12	90	106	M6	M8	M8	76	200	8,5	102	M 8	80	37	35	18	11,23 kg	1,76 kg
DLVZ 200																										

1 **(1)** Belt connection right **(2)** Belt connection left 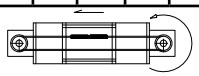

Choice of guide body profile:

0

(0)

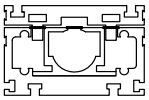

internal profile with cover bands

(1)

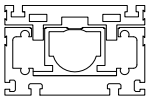

internal profile without cover bands

(2)

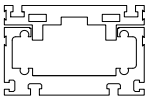

without internal profile and cover bands

(3)

with bellows

Stainless versions upon request.

0 **Choice of carriages:**

(0)

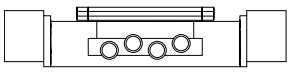

(2)

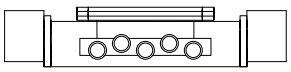

(3)

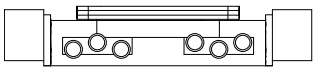

Size	Version 0		Version 2		Version 3	
	Q	L	Q	L	Q	L
120	156	300	196	340	236	380
160	200	440	250	490	>300	>540
200						

Selection of shaft mounting:

0

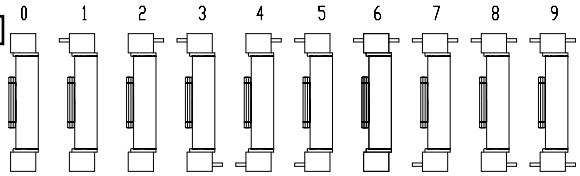

The standard version 0 is supplied with 4 flush mounted shafts.

Belt table

Code No.		Size	Belt	mm/rev.	Number of teeth
0	**4**	120	5M25	80	16
0	**4**	160	5M25	110	22
0	**9**	200			

Shaft dimensions

Size	Shaft ø h6 x length	Key
120	14 x 35	5x5x28
160	18 x 45	6x6x40
200		

Basic Length + Stroke + Overtravel** = total length
**Minimum 25mm on each end

DLVZ	160	1	0	0	0	0	4	1	01500
	Pos.	1	2	3	4	5	6	7	

Sample ordering code:
DLVZ 160 with belt connection right, internal profile with cover bands, standard carriage and 4 flush mounted shafts, 1090 mm stroke

Modular Linear Actuator
DLR 120, 160, 200

Roller Unit Without Drive **Specifications**

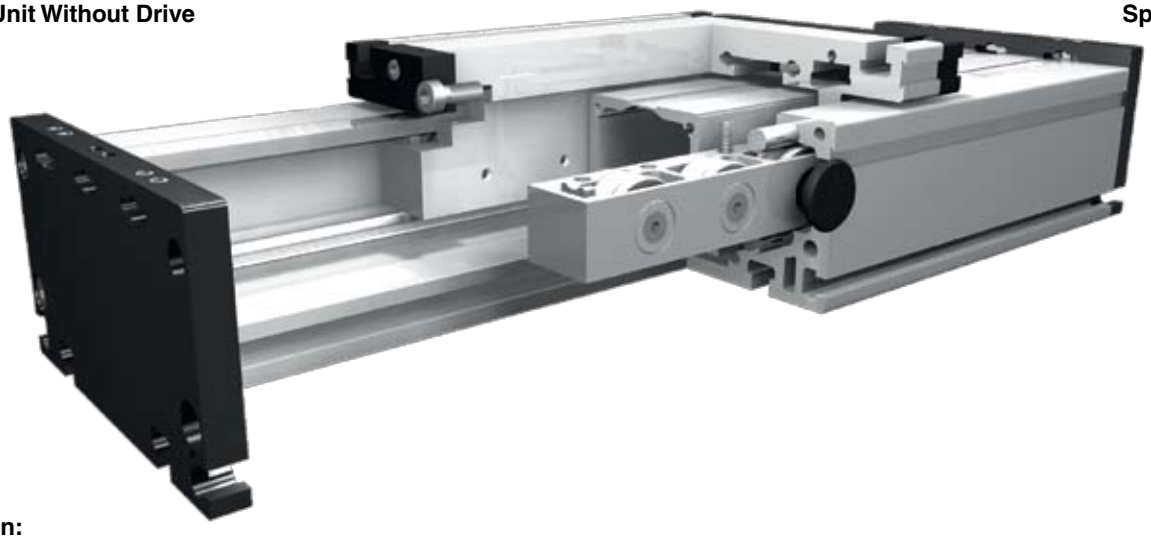

Function:
This unit consists of a rectangular aluminium profile with 2 integrated roller guides. The openings of the guide body are sealed with 3 stainless steel cover bands to protect the guide from splash water and dust. Alternatively, the opening can also be covered with a bellow or can be delivered without cover bands. The roller guide can be either driven by an internal pneumatic cylinder or other additional drives or it serves as load carrying linear slide.

Fitting position: As required. Max. length 6.000 mm without joints.
Carriage mounting: By T-slots.
Unit mounting: By T-slots and mounting sets. The linear axis can be combined with any T-slot profile.
Carriage support: In the standard version, the carriage runs on 8 rollers which can be adjusted and serviced at a central servicing position. For longer carriages the number of rollers can be increased.

Forces and torques

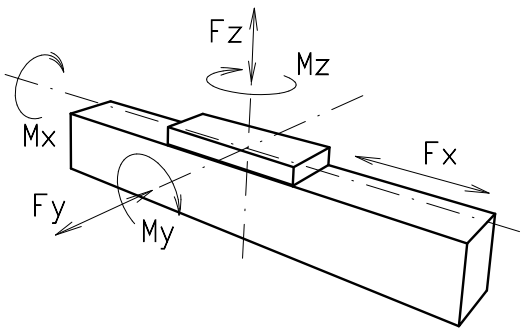

Size	120		160		200	
Forces/Torques	static	dynamic	static	dynam.	static	dynam.
F_x (N)	-	-	-	-	-	-
F_y (N)	1100	900	3000	2000	4400	3100
F_z (N)	1250	1000	3500	2800	4900	4400
M_x (Nm)	150	125	400	320	600	510
M_y (Nm)	140	120	360	300	560	480
M_z (Nm)	100	90	180	150	310	275

All forces and torques related to the following:

existing values / table values

$$\frac{Fy}{Fy_{dyn}} + \frac{Fz}{Fz_{dyn}} + \frac{Mx}{Mx_{dyn}} + \frac{My}{My_{dyn}} + \frac{Mz}{Mz_{dyn}} \leq 1$$

Speed			
(m/sec) max	4	6	8
Geometrical moments of inertia of aluminium profile			
I_x mm^4	6,6x10^5	22,2x10^5	63,8x10^5
I_y mm^4	38,6x10^5	122,0x10^5	335,0x10^5
Elastic modulus N/mm^2	70000	70000	70000

Formula: DLR

$$f = \frac{F*L^3}{E*I*192}$$

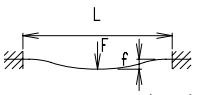

f = deflection (mm)
F = load (N)
L = free length (mm)
E = elastic modulus 70000 (N/mm^2)
I = second moment of area (mm^4)

nookindustries.com toll-free 1 (800) 321-7800
www.nookindustries.ru (499) 703 35 98 sell@nookindustries.ru

Modular Linear Actuator
DLR 120, 160, 200

Dimensions (mm)

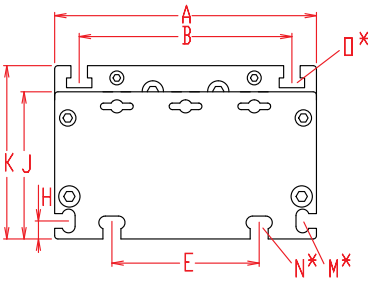

Increasing the carriage length will increase the basic length by the same amount.

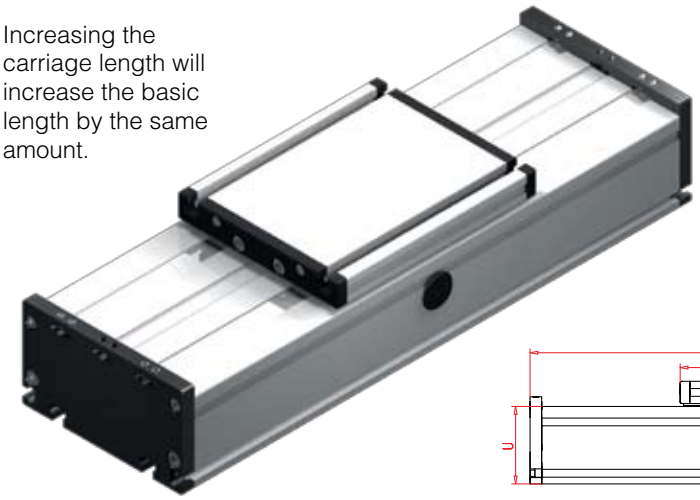

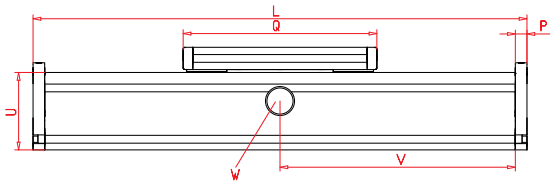

*For slide nuts refer to accessory section V = Q + 100 mm W = servicing position

Size	Basic length L	A	B	E	H	J	K	M for	N for	O for	P	Q	U	Basic weight	Weight per 100 mm
DLR 120	200	120	96	78	10	68	79	M 5	M 6	M 6	10	156	60	3,2 kg	0,71 kg
DLR 160	240	160	130	90	11	90	106	M 6	M 8	M 8	12	200	80	6,9 kg	1,42 kg
DLR 200	320	200	160	140	15	110	129	M 8	M 10	M 10	15	270	100	11,4 kg	2,30 kg

Choice of guide body profile:

0

(0)

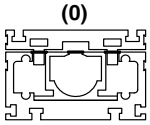

internal profile with cover bands

(1)

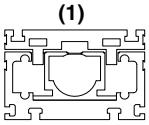

internal profile without cover bands

(2)

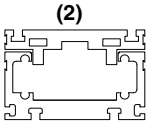

without internal profile and cover bands

(3)

with bellows

Stainless versions upon request.

Arrangement of rollers:

0

(0)

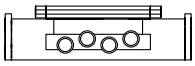

(2)

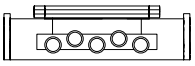

(3)

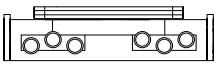

Size	Version 0		Version 2		Version 3	
	Q	L	Q	L	Q	L
120	156	200	196	240	>236	>280
160	200	240	250	290	>300	>340
200	270	320	330	380	>410	>470

1500

Basic Length + Stroke + Overtravel** = total length
**Minimum 25mm on each end

DLR	160	0	0	0	0	0	0	0	01500
	Pos.	1	2	3	4	5	6	7	

Inductive proximity switch sets, which can be mounted inside of the square profile, are available as accessories. Coupling and a special plug are mounted from the outside.

Sample ordering code:
DLR160, with internal profile and cover bands, standard rollers, 1260 mm stroke.

Dust Sealing D 200 Systems

Without Cable Chain
Code-No.: 028x0

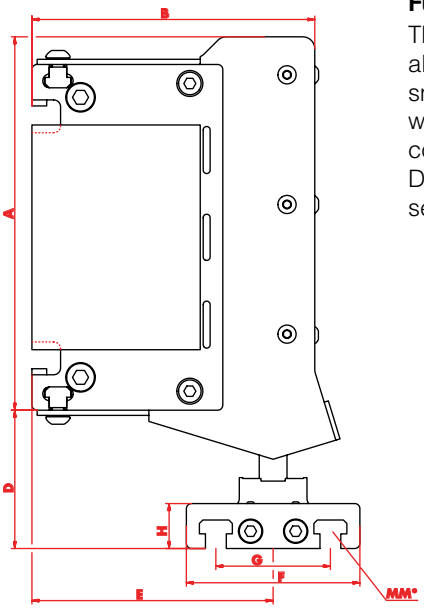

Function:
The dust seal consists of a specially formed aluminium sheet which is provided with a smooth running brush and is available either with or without energy chain take-up. This cover makes it possible to retrofit existing D 200 Modular Linear Actuators with a sealing.

With Cable Chain
Code-No.:028x1

Specifications

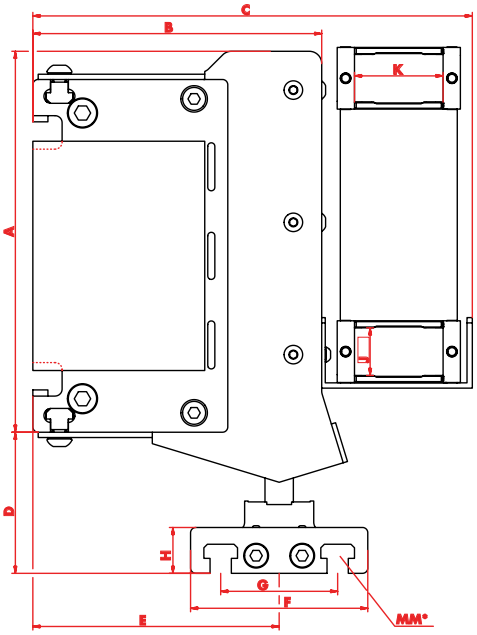

*For slide nuts refer to carriage profile QL/QS in the accessory section

Code-No.	for Size	Basic length L	A	B	C	D	E	F	G	H	J	K	MM for	Basic weight	Weight per 100 mm
02830	D 120	**													
02831	D 120	**													
02840	D 160	**													
02841	D 160	**													
02850	D 200	**	216	163	-	80	139	100	66	26	-	-	M 10	** kg	0,46 kg
02851	D 200	**	216	163	248	80	139	100	66	26	27	50	M 10	** kg	0,60 kg

** System dependent

02851	2000

Sample ordering code:
D 200 Dust sealing with cable chain, 2000 mm length

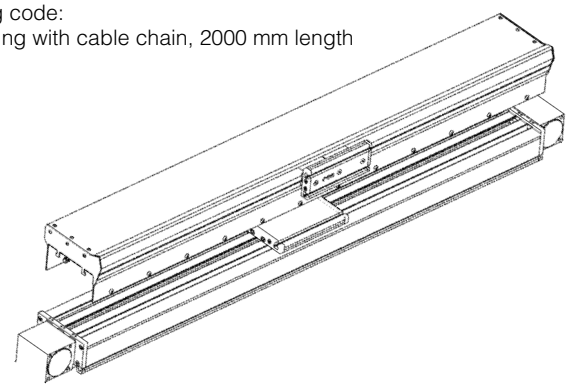

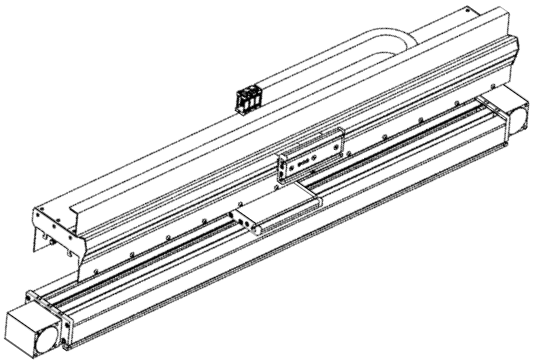

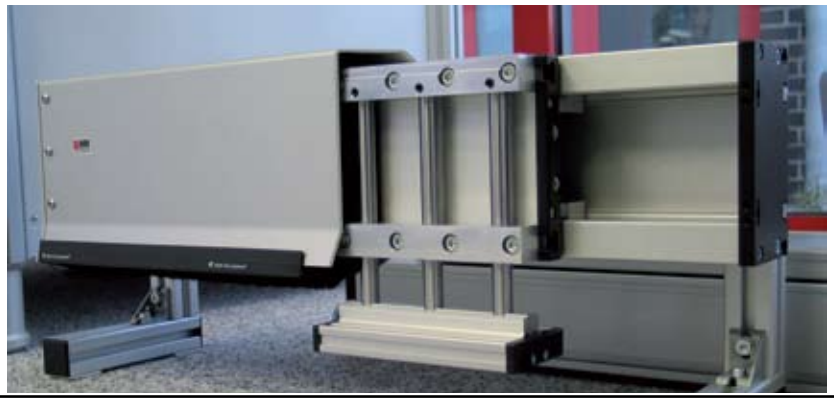

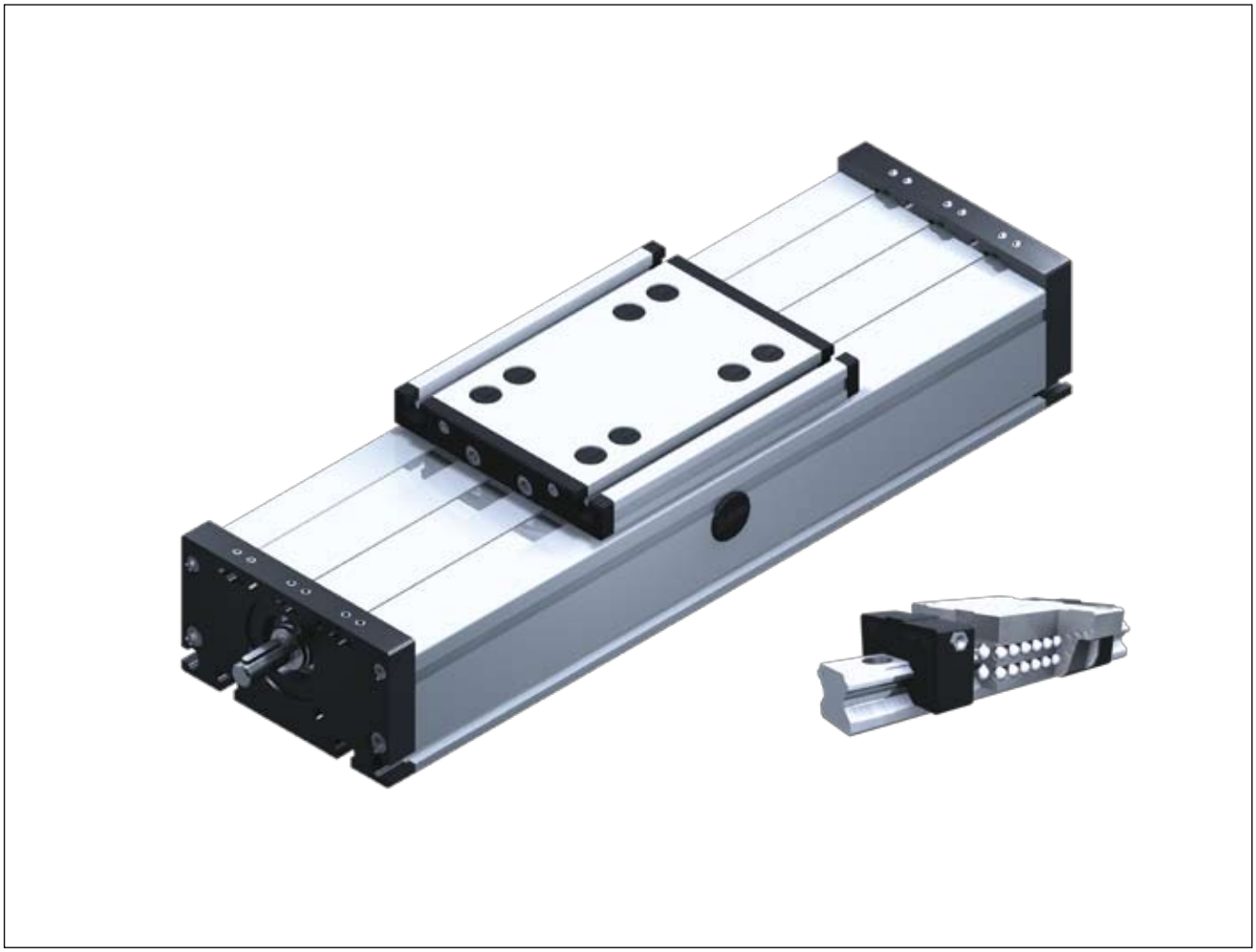

Rail Guide
Modular Linear Actuators
DS

Modular Linear Actuator
DST/DSK 120, 160, 200

Screw Drives **Specifications**

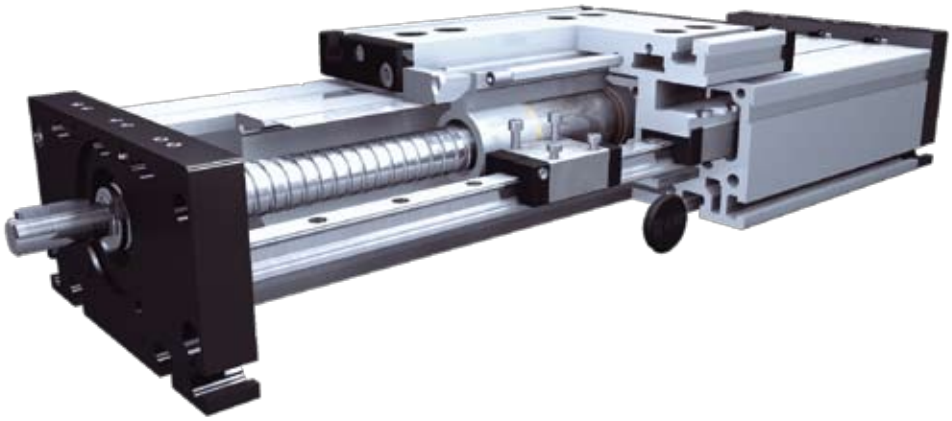

Function:
This unit consists of a rectangular aluminium profile with 2 integrated rail guides. The carriage is driven by means of a rotating screw with leading nut. Where two parallel linear units are used or where two carriages are mounted on one unit, the leading-nut receiver can be used to adjust the symmetry of the carriages. The openings of the guide body are sealed with 3 stainless steel cover bands to protect the drive from splash water and dust. Another option is to cover the opening with a bellows.

Fitting position: As required. Max. length 3.000 mm without joints.
Carriage mounting: By T-slots.
Unit mounting: By T-slots and mounting sets. The linear axis can be combined with any T-slot profile.
Carriage support: In the standard version, the carriage runs on 4 runner blocks which can be serviced at a central servicing position. For longer carriages the number of runner blocks can be increased.
Repeatability: Ballscrew ± 0,025 mm, acme screw ± 0,2 mm.

Forces and torques

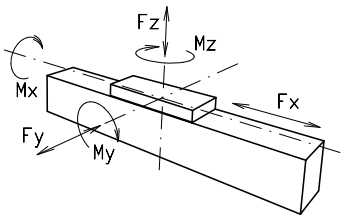

Size	120		160		200			
permitted dyn. Forces*	5000 km	10000 km	5000 km	10000 km	5000 km	10000 km		
F_x (N)	900	800	5000	4000	10000	8000		
F_Y (N)	1776	1405	5570	3900	15600	11080		
F_z (N)	2090	1650	7050	5020	20600	14600		
M_x (Nm)	81	64	358	255	1285	915		
M_y (Nm)	97	77	369	262	1375	980		
M_Z (Nm)	96	76	364	258	1345	960		
C (N)	2310		7800		22800			
All forces and torques related to the following: existing values / table values $\frac{Fy}{Fy_{dyn}} + \frac{Fz}{Fz_{dyn}} + \frac{Mx}{Mx_{dyn}} + \frac{My}{My_{dyn}} + \frac{Mz}{Mz_{dyn}} \leq 1$								
No-load torque								
Acme screw	18 x 4	18 x 8	24 x5	24 x 10	32 x 6	32 x 12		
(Nm)	0,8	1,1	1,0	1,3	1,5	1,7		
Ballscrew	16 x 5	16 x 10	25 x 5	20 x 20	32 x 5	32 x 10	32 x 20	32 x 32
(Nm)	0,7	1,0	1,0	1,2	1,3	1,6	1,7	1,7
Geometrical moments of inertia of aluminium profile								
I_x mm^4	$5{,}61 \times 10^5$		$2{,}13 \times 10^6$		$4{,}81 \times 10^6$			
I_y mm^4	$34{,}19 \times 10^5$		$12{,}33 \times 10^6$		$26{,}0 \times 10^6$			
Elastic modulus N/mm^2	70000		70000		70000			

* referred to life-time

Formula: DST/K
Driving torque:

$$M_a = \frac{F*P*S_i}{2000*\pi*\mu} + M_{leer}$$

$$P_a = \frac{M_a*n}{9550}$$

F	= force	(N)
P	= screw pitch	(mm)
S_i	= safety factor 1,2 ... 2	
M_{leer}	= no-load torque	(Nm)
n	= rpm of screw	(min^{-1})
M_a	= driving torque	(Nm)
μ	= screw efficiency	
P_a	= motor power	(KW)

Deflection:

$$f = \frac{F*L^3}{E*I*192}$$

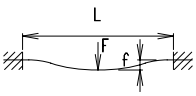

f	= deflection	(mm)
F	= load	(N)
L	= free length	(mm)
E	= elastic moduusl 70000	(N/mm^2)
I	= second moment of area	(mm^4)

Efficiency of lead screws:

All ballscrew	0,900
Tr 24x5	0,384
Tr 24x10	0,550
Tr 32x6	0,360
Tr 32x12	0,524

Nominal lifetime:

$$L = \left(\frac{C}{F}\right)^3 x10^5$$

L	= Lifetime in meter	
C	= Dynamic load factor	(N)
F	= Middle load	(N)

Modular Linear Actuator
DST/DSK 120, 160, 200

Dimensions (mm)

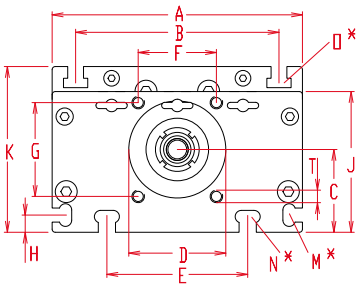

Increasing the carriage length will increase the basic length by the same amount.

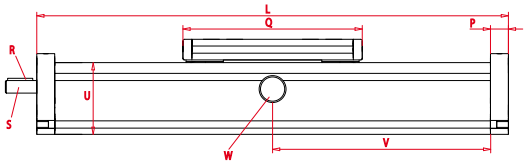

*For slide nuts refer to the accessory section V = Q + 100 mm W = servicing position

Size	Basic length L	A	B	C	D	E	F	G	H	J	K	M for	N for	O for	P	Q	Shaft R Key	Shaft S Ø x length	T	U	Basic weight	Weight per 100 mm
DS 120	200	120	96	39	47	78	42	42	10	68	79	M 5	M 6	M 6	15	156	3x3x25	10 h6 x 27	M 6	60	3,9 kg	0,92 kg
DS 160	260	160	130	53	62	90	50	60	11	90	106	M 6	M 8	M 8	20	200	5x5x28	14 h6 x 35	M 8	80	7,2 kg	2,1 kg
DS 200	320	200	160	66	68	140	60	60	15	110	129	M 8	M 10	M 10	20	270	6x6x40	22 h6 x 45	M 8	100	19,4 kg	3,5 kg

Screw:
T **(T)** Acme screw **(K)** Ballscrew

Selection of screw:
1 **(1)** right hand **(2)** left hand (Ballscrew by inquiry)

Choice of guide body profile:
0

(0)

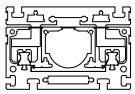

internal profile with cover bands

(3)

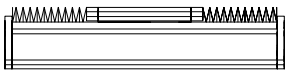

with bellows

Stainless versions upon request.

Choice of carriages:
0

(0)

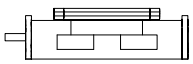

(1)

Size	Version 0 Q	Version 0 L	Version 1 Q	Version 1 L
120	156	200	156	200
160	200	260	>230	>290
200	270	320	>310	>360

Choice of journal:
0 **(0)** one shaft (locating bearing side) **(1)** one shaft (non-locating bearing side) **(2)** shaft on both sides

0

Selection of screw:	**Size**	**Standard**	**Multistart screw**		
Ballscrew right hand	120	**(0)** 16x5	**(1)** 10x10		
	160	**(0)** 25x5	**(1)** 20x20	**(2)** 25x10	**(3)** 25x25
	200	**(0)** 32x5	**(1)** 32x10	**(2)** 32x20	**(3)** 32x32
Ballscrew left hand	upon request				
Acme right hand screw	120	**(0)** 18x4	**(1)** 18x8		
	160	**(0)** 24x5	**(1)** 24x10		
	200	**(0)** 32x6	**(1)** 32x12		
Acme left hand screw	120	**(0)** 18x4	**(1)** 18x8		
	160	**(0)** 24x5	**(1)** 24x10		
	200	**(0)** 32x6	**(1)** 32x12		

Ballscrew pitch accuracy:
0 **(0)** 0,1 mm / 300 mm (Standard) **(1)** 0,05 mm / 300 mm **(2)** 0,025 mm / 300 mm

End play of ball nut:
0 **(0)** 0,04 mm (Standard) **(1)*** < 0,02 mm **(2)*** 2% apply prestress
* only in combination with **pitch accuracy (1)** or **(2)**

1500 Basic Length + Stroke + Overtravel** = total length
**Minimum 25mm on each end

Inductive proximity switch sets, which can be mounted inside of the square profile, are available as accessories. Coupling and a special plug are mounted from the outside. For additional accessories refer to the accessory section.

DS	T	160	1	0	0	0	0	0	0	01500
		Pos.	1	2	3	4	5	6	7	

Sample ordering code:
DST160, acme right hand screw, with internal profile and cover bands, standard carriage, one shaft (locating bearing side), Screw 24x5, 1240 mm stroke.

Modular Linear Actuator
DST/DSK 120, 160, 200

With Acme Screw or Ballscrew, Right-Hand and Left-Hand Screw or Divided Screws

Dimensions (mm)

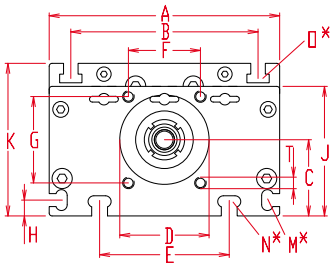

Increasing the carriage length will increase the basic length by the same amount.

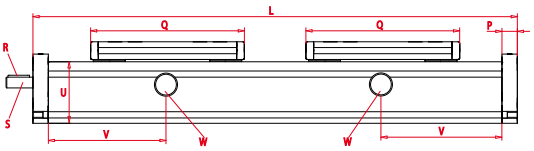

*For slide nuts refer to the accessory section V = Q + 100 mm W = servicing position

Size	Basic length L	A	B	C	D	E	F	G	H	J	K	M for	N for	O for	P	Q	Shaft R Key	Shaft S Ø x length	T	U	Basic weight	Weight per 100 mm
DS 120	360	120	96	39	47	78	42	42	10	68	79	M 5	M 6	M 6	15	156	3x3x25	10 h6 x 27	M 6	60	5,1 kg	0,92 kg
DS 160	470	160	130	53	62	90	50	60	11	90	106	M 6	M 8	M 8	20	200	5x5x28	14 h6 x 35	M 8	80	10,1 kg	2,1 kg
DS 200	590	200	160	66	68	140	60	60	15	110	129	M 8	M 10	M 10	20	270	6x6x40	22 h6 x 45	M 8	100	35,9 kg	3,5 kg

Screw:
T **(T)** Acme screw **(K)** Ballscrew

Selection of screw:
3 **(3)** right - left hand (ballscrew by inquiry) **(4)** divided Screw

Choice of guide body profile:
0

(0)

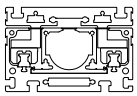

internal profile with cover bands

(3)

with bellows

Stainless versions upon request.

Choice of carriages:
0

(0)

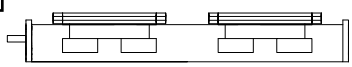

(1)

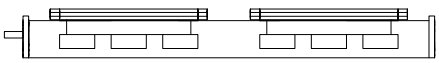

Size	Version 0 Q	Version 0 L	Version 1 Q	Version 1 L
120	156	360	156	360
160	200	470	>230	>530
200	270	590	>310	>680

0 **Choice of journal:**
(0) shaft right hand screw **(1)** shaft left hand screw **(2)** shaft on both sides

0

Selection of screw:	Size	Standard	Multistart screw		
Ballscrew right hand	120				
	160	**(0)** 25x5	**(1)** 20x20*	**(2)** 25x10*	
	200	**(0)** 32x5	**(1)** 32x10*	**(2)** 32x20*	**(3)** 32x32*
Ballscrew left hand	upon request				
Acme right hand screw	120	**(0)** 18x4	**(1)** 18x8		
	160	**(0)** 24x5	**(1)** 24x10		
	200	**(0)** 32x6	**(1)** 32x12		
Acme left hand screw	120	**(0)** 18x4	**(1)** 18x8		
	160	**(0)** 24x5	**(1)** 24x10		
	200	**(0)** 32x6	**(1)** 32x12		

* = only for selection of divided screw

Ballscrew pitch accuracy:
0 **(0)** 0,1 mm / 300 mm (Standard) **(1)** 0,05 mm / 300 mm **(2)** 0,025 mm / 300 mm

End play of ball nut:
0 **(0)** 0,04 mm (Standard) **(1)*** < 0,02 mm **(2)*** 2% apply prestress
* only in combination with **pitch accuracy (1)** or **(2)**

1500 Basic Length + Stroke + Overtravel** = total length
**Minimum 25mm on each end

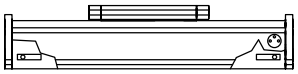

DS	T	160	3	0	0	0	0	0	0	01500
		Pos.	1	2	3	4	5	6	7	

Inductive proximity switch sets, which can be mounted inside of the square profile, are available as accessories. Coupling and a special plug are mounted from the outside. For additional accessories refer to the accessory section.

Sample ordering code:
DST160, Acme right - left hand screw, with internal profile and cover bands, standard carriage, shaft on right hand screw, Screw 24x5,1030 mm stroke.

8.1

Possible Mounting Styles

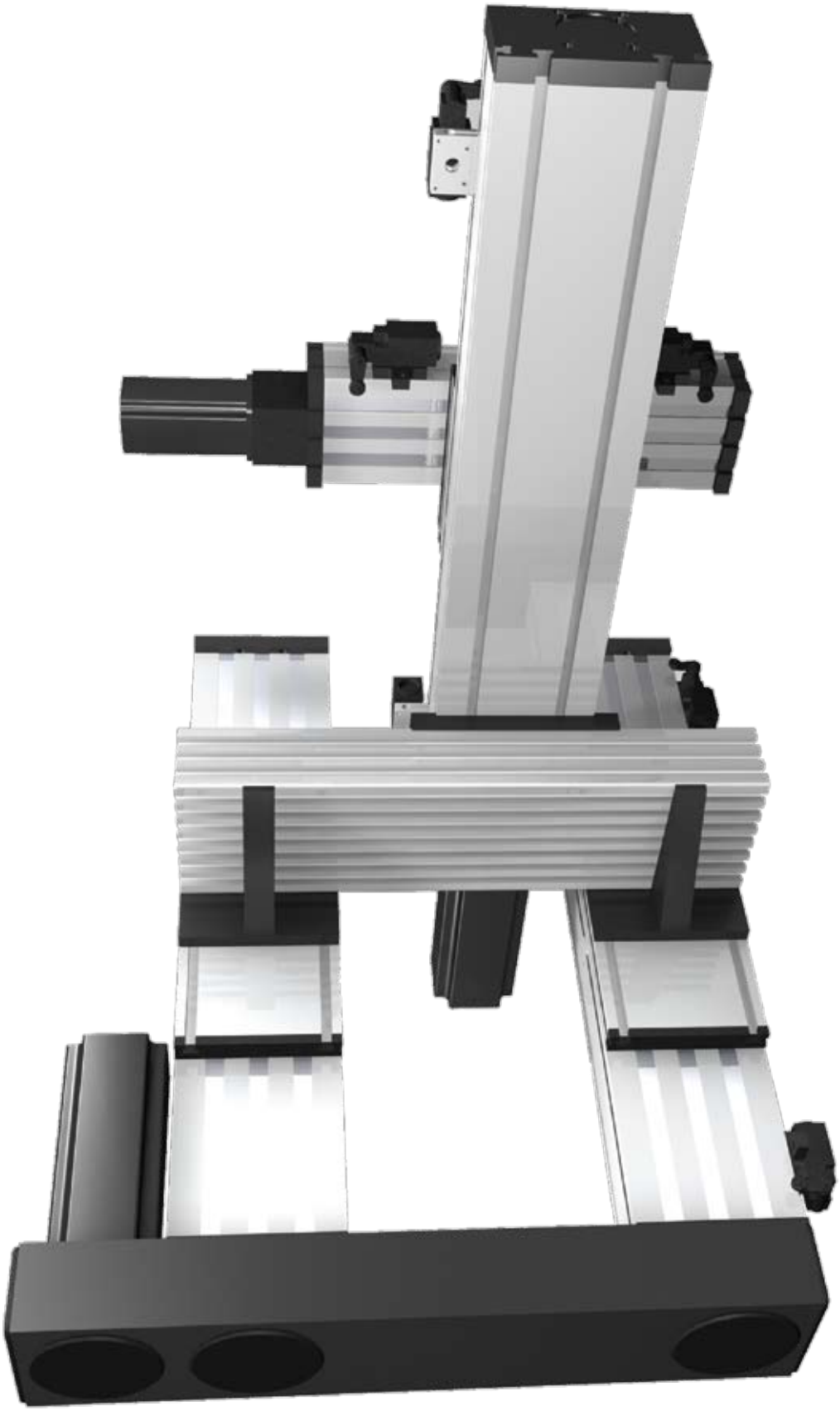

Modular Linear Actuator
DSZ 120, 160, 200

Belt Drive **Specifications**

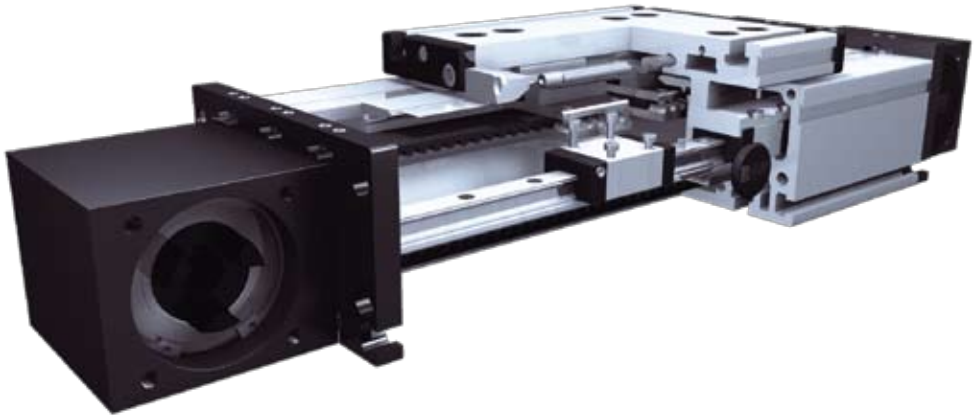

Function:
This unit consists of a rectangular aluminium profile with 2 integrated rail guides. The carriage is moved by a belt drive. Each standard pulley has one coupling claw on one side. Belt tension can be readjusted by a simple screw adjustment device in the carriage. This device can also be used for symmetrical adjustment of two or more linear units running parallel. The openings of the guide body are sealed with 3 stainless steel cover bands to protect the guide from splash water and dust. Alternatively, the opening can also be covered with a bellow or can be delivered without cover bands.

Fitting position: As required. Max. length 6.000 mm without joints.
Carriage mounting: By T-slots.
Unit mounting: By T-slots and mounting sets. The linear axis can be combined with any T-slot profile.
Belt type: HTD with steel reinforcement, no backlash when changing direction, repeatability ± 0,1 mm.
Carriage support: In the standard version, the carriage runs on 4 runner blocks which can be serviced at a central servicing position. For longer carriages the number of runner blocks can be increased.

Forces and torques

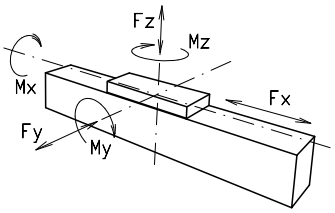

Size	120		160		200	
permitted dyn. Forces*	5000 km	10000 km	5000 km	10000 km	5000 km	10000 km
F_x (N)	894	800	1900	1800	4000	3800
F_y (N)	1776	1405	2236	1775	5155	4092
F_z (N)	2090	1650	5278	4189	11311	8977
M_x (Nm)	81	64	282	224	752	597
M_y (Nm)	97	77	283	225	813	646
M_z (Nm)	96	76	300	238	862	684
C (N)	2310		7800		22800	

All forces and torques related to the following:

existing values / table values: $\frac{Fy}{Fy_{dyn}} + \frac{Fz}{Fz_{dyn}} + \frac{Mx}{Mx_{dyn}} + \frac{My}{My_{dyn}} + \frac{Mz}{Mz_{dyn}} \leq 1$

No-load torque			
without cover bands	1,2	**1,5**	**2,0**
with cover bands	1,6	**2,1**	**2,9**
Speed			
(m/sec) max	5	5	5
Tensile force			
permanent (N)	900	1900	4000
0,2 sec (N)	1000	2090	4300
Geometrical moments of inertia of aluminium profile			
I_x mm^4	5,61x10^5	2,13x10^6	4,81 x10^6
I_y mm^4	34,19x10^5	12,33x10^6	26,0 x10^6
Elastic modulus N/mm^2	70000	70000	70000

* referred to life-time

Formula: DSZ

Driving torque:

$$M_a = \frac{F*P*S_i}{2000*\pi} + M_{leer}$$

$$P_a = \frac{M_a*n}{9550}$$

F = force (N)
P = pulley action perimeter(mm)
S_i = safety factor 1,2 ... 2
M_{lee} = no-load torque (Nm)
n = rpm pulley (min^{-1})
M_a = driving torque (Nm)
P_a = motor power (KW)

Deflection:

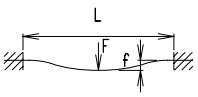

$$f = \frac{F*L^3}{E*I*192}$$

f = deflection $\left(\frac{C}{F}\right)^3$ (mm)
F = load
L = free length
E = elastic modulus 70000
I = second moment of area (mm^4)

Nominal lifetime:

L = x10^5

L = Lifetime in meter
C = Dynamic load factor (N)
F = Middle load (N)

Modular Linear Actuator
DSZ 120, 160, 200

Dimensions (mm)

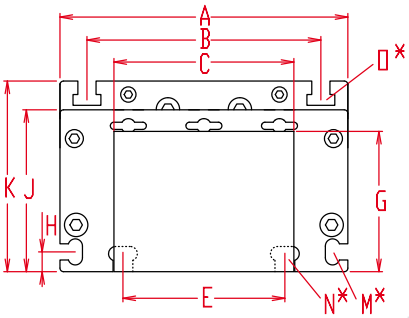

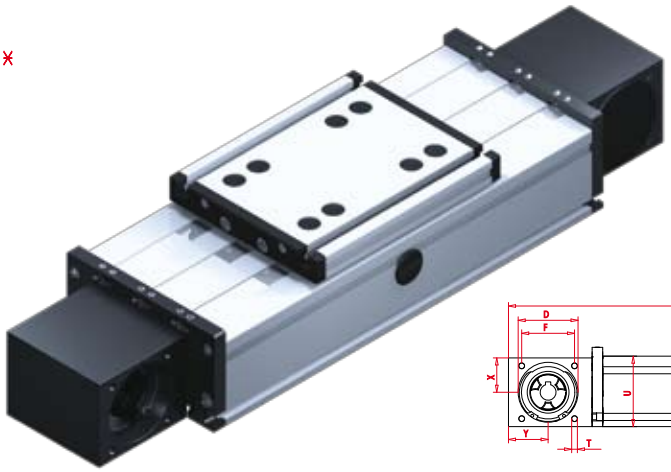

Increasing the carriage length will increase the basic length by the same amount.

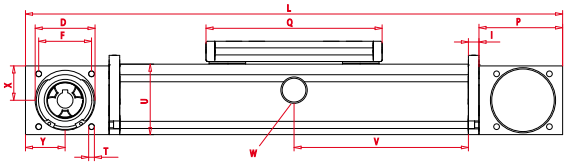

*For slide nuts refer to the accessory section V = Q + 100 mm W = servicing position

Size	Basic length L	A	B	C	D	E	F	G	H	I	J	K	M for	N for	O for	P	Q	T	U	X	Y	Basic weight	Weight per 100 mm
DSZ 120	330	120	96	80	47	78	42	60	10	10	68	79	M 5	M 6	M 6	70	156	M 6	60	30	35	5,1 Kg	0,85 Kg
DSZ 160	440	160	130	100	68	90	60	78	11	12	90	106	M 6	M 8	M 8	95	200	M 8	80	39	45	12,0 kg	1,9 kg
DSZ 200	530	200	160	130	90	140	80	97	15	15	110	129	M 8	M 10	M 10	110	270	M 10	100	49	50	21,3 kg	2,9 kg

Choice of guide body profile:

0

(0)

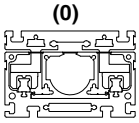

internal profile with cover bands

(1)

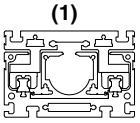

internal profile without cover bands

(2)

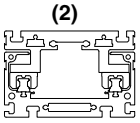

without internal profile and cover bands

(3)

with bellows

Stainless versions upon request.

Choice of carriages:

0

(0)

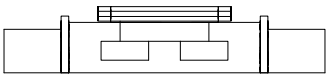

(1)

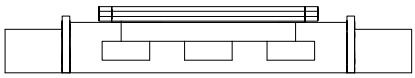

Size	Version 0		Version 1	
	Q	L	Q	L
120	156	330	156	330
160	200	440	>230	>470
200	270	530	>310	>570

Coupling - Selection of shaft mounting:

0

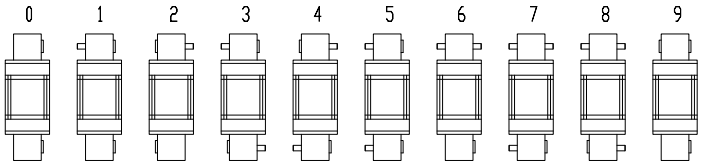

9 is as 0, but with coupling claws on both sides.
The standard version is supplied without shaft. A shaft can be retrofitted by inserting it into the pulley bore and securing it with 2 locking rings or tension sets (size 200).

Belt table

Code No.		Size	Belt	mm/rev.	Number of teeth
0	4	120	5M25	130	26
0	7	160	8M30	176	22
0	9	160	8M50	176	22
0	9	200	8M50	224	28
1	0	200	8M70	224	28

Shaft dimensions

Size	Shaft ø h6 x length	Key
120(5M25)	14 x 35	5x5x28
160(8M30)	18 x 45	6x6x40
160(8M50)	25 x 35	8x8x32
200(8M50)	22 x 45	6x6x40
200(8M70)	30 x 55	8x7x40

DSZ	160	1	0	0	0	0	7	1	01500
	Pos.	1	2	3	4	5	6	7	

Basic Length + Stroke + Overtravel** = total length
**Minimum 25mm on each end

Inductive proximity switch sets, which can be mounted inside of the square profile, are available as accessories. Coupling and a special plug are mounted from the outside. For additional accessories refer to the accessory section.

Sample ordering code:
DSZ160 with internal profile and cover bands, standard carriage, coupling claw on one side, 1060 mm stroke.

Modular Linear Actuator
DSSZ 120, 160, 200

Belt Drive **Specifications**

Function:
This linear unit consists of a rectangular aluminium profile with integrated rail guides . The carriage, which has runner blocks, is driven by a timing belt. Each standard pulley includes a coupling claw on one side and is equipped with maintenance-free ball bearings. Belt tension can be readjusted by a simple screw adjustment device in the carriage. This device can also be used for symmetrical adjustment of two or more linear units running parallel.

Fitting position: As required. Max. length 6.000 mm without joints.
Carriage mounting: By T-slots.
Unit mounting: By T-slots and mounting sets. The linear axis can be combined with any T-slot profile.
Belt performance: HTD with steel reinforcement, no backlash when changing direction, repeatability ± 0,1 mm.
Carriage support: In the standard version, the carriage runs on 4 runner blocks which can be serviced at a central servicing position. For longer carriages the number of runner blocks can be increased.

Forces and torques

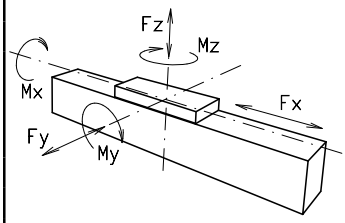

Size	120		160		200	
permitted dyn. Forces*	5000 km	10000 km	5000 km	10000 km	5000 km	10000 km
F_x (N)	1900	1800	4000	3800	5900	5750
F_Y (N)	1776	1405	2236	1775	15600	11080
F_z (N)	2090	1650	5278	4189	20600	14600
M_x (Nm)	81	64	282	224	1285	915
M_y (Nm)	97	77	283	225	1375	980
M_Z (Nm)	96	76	300	238	1345	960
C (N)	2310		7800		22800	
All forces and torques related to the following: existing values / table values $\frac{Fy}{Fy_{dyn}} + \frac{Fz}{Fz_{dyn}} + \frac{Mx}{Mx_{dyn}} + \frac{My}{My_{dyn}} + \frac{Mz}{Mz_{dyn}} \leq 1$						
No-load torque						
(Nm)	1,4		1,8		2,2	
Speed						
(m/sec) max	5		5		5	
Tensile force						
permanent (N)	1900		4000		5900	
0,2 sec (N)	2090		4300		6350	
Geometrical moments of inertia of aluminium profile						
I_x mm^4	5,61x10^5		2,13x10^6		48,07 x10^5	
I_y mm^4	34,19x10^5		12,33x10^6		259,99 x10^5	
Elastic modulus N/mm^2	70000		70000		70000	

* referred to life-time

Formula: DSSZ

Driving torque:

$$M_a = \frac{F*P*S_i}{2000*\pi} + M_{leer}$$

$$P_a = \frac{M_a*n}{9550}$$

F = force (N)
P = pulley action perimeter(mm)
S_i = safety factor 1,2 ... 2
M_{lee} = no-load torque (Nm)
n = rpm pulley (min^{-1})
M_a = driving torque (Nm)
P_a = motor power (KW)

Deflection:

$$f = \frac{F*L^3}{E*I*192}$$

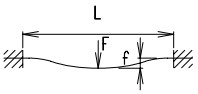

f = deflection (mm)
F= load
L= free length
E= elastic modulus 70000 (N/mm^2)
I = second moment of area (mm^4)

Nominal lifetime:

$$L = \left(\frac{C}{F}\right)^3 x10^5$$

L = Lifetime in meter
C = Dynamic load factor (N)
F = Middle load (N)

Modular Linear Actuator
DSSZ 120, 160, 200

Dimensions (mm)

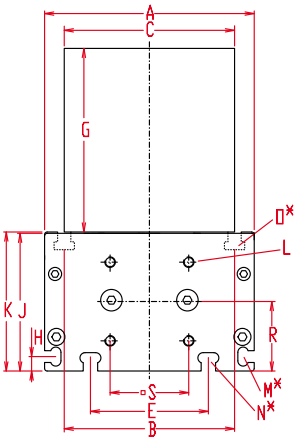

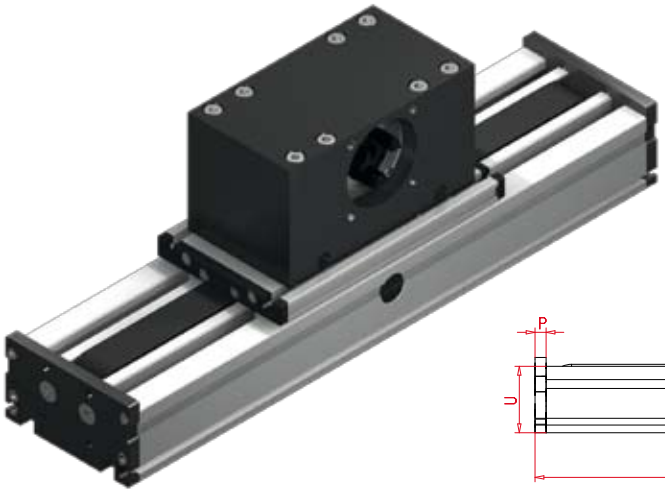

Increasing the carriage length will increase the basic length by the same amount.

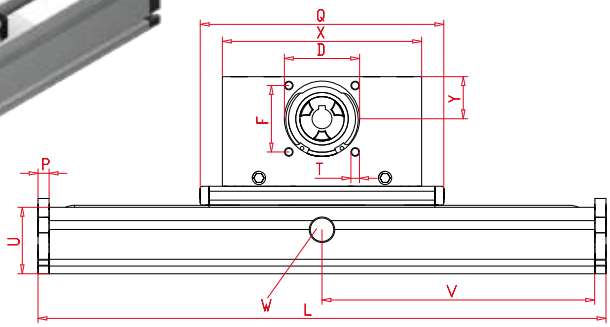

*For slide nuts refer to the accessory section V = Q + 100 mm W = servicing position

Size	Basic length L	A	B	C	D	E	F	G	H	J	K	L for	M for	N for	O for	P	Q	R	S ⊠	T	U	X	Y	Basic weight	Weight per 100 mm
DSSZ 120	230	120	96	100	68	78	60	100	10	78	79	M 6	M 5	M 6	M 6	10	200	39	42	M 8	60	180	39	12,0 kg	1,2 kg
DSSZ 160	330	160	130	130	90	90	80	140	11	105	106	M 8	M 6	M 8	M 8	12	290	53	60	M 10	80	270	60	27,8 kg	1,8 kg
DSSZ 200	380	200	160	160	110	140	100	145	15	128	129	M 10	M 8	M 10	M 10	15	340	62,5	95	M 10	100	310	62	53,0 kg	2,6 kg

Choice of guide body profile:

1

(1)

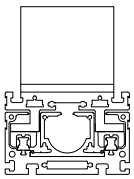

internal profile
without cover bands

(2)

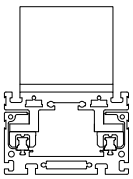

without internal profile
and cover bands

(3)

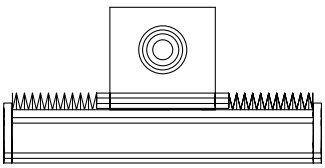

with bellows

Stainless versions upon request.

Choice of carriages:

0

(0)

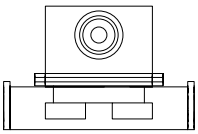

(1)

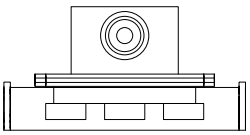

Size	Version 0		Version 1	
	Q	L	Q	L
120	200	230	200	230
160	290	330	>370	>410
200	340	380	360	400

Coupling - Selection of shaft mounting:

0

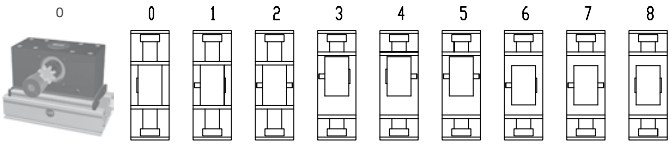

8 is as 0, but with coupling claws on both sides.The standard version is supplied without shaft. A shaft can be retrofitted by inserting it into the pulley bore and securing it with 2 locking rings or tension sets (size 200).

Belt table

Code No.		Size	Belt	mm/rev.	Number of teeth
0	**7**	120	8M30	192	24
0	**9**	160	8M50	256	32
1	**0**	200	8M70	304	38

Shaft dimensions

Size	Shaft ø h6 x length	Key
120	18 x 45	6x6x40
160	22 x 45	6x6x40
200	30 x 55	8x7x44

DSSZ	160	1	1	0	0	0	9	1	01500
	Pos.	1	2	3	4	5	6	7	

Basic Length + Stroke + Overtravel** = total length

**Minimum 25mm on each end

Inductive proximity switch sets, which can be mounted inside of the square profile, are available as accessories. Coupling and a special plug are mounted from the outside. For additional accessories refer to the accessory section.

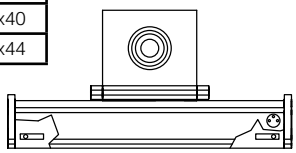

Sample ordering code:
DSSZ160, body profile with internal profile without cover bands, standard carriage, coupling claws on one side, 1170 mm stroke

Modular Linear Actuator
DSR 120, 160, 200

Roller Unit Without Drive **Specifications**

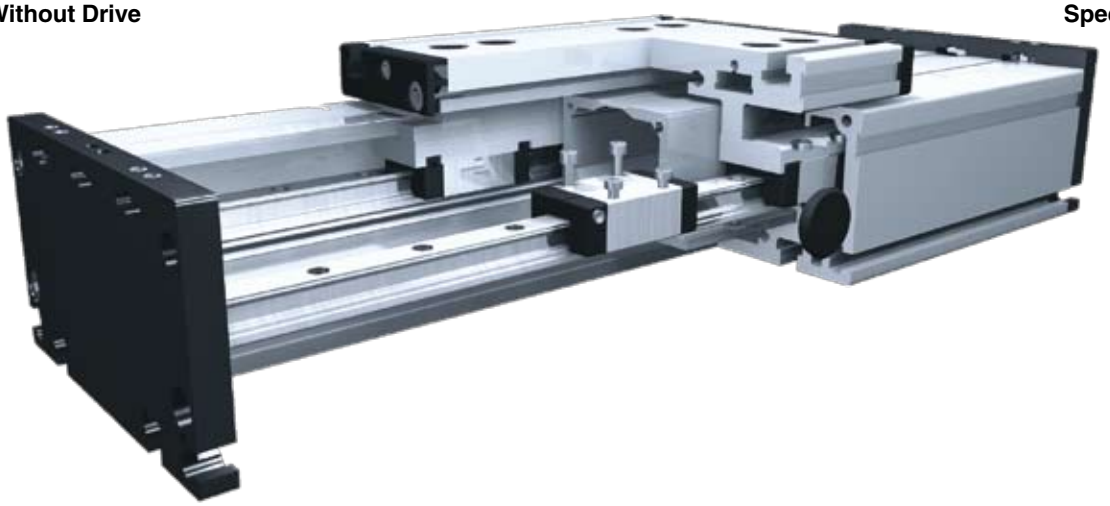

Function:
This unit consists of a rectangular aluminium profile with 2 integrated rail guidess. The openings of the guide body are sealed with 3 stainless steel cover bands to protect the guide from splash water and dust. Alternatively, the opening can also be covered with a bellow or can be delivered without cover bands. The Modular Linear Actuator can be either driven by an internal pneumatic cylinder or other additional drives or it serves as load carrying linear slide.

Fitting position: As required. Max. length 6.000 mm without joints.
Carriage mounting: By T-slots.
Unit mounting: By T-slots and mounting sets. The linear axis can be combined with any T-slot profile.
Carriage support: In the standard version, the carriage runs on 4 runner blocks which can be adjusted and serviced at a central servicing position. For longer carriages the number of runner blocks can be increased.

Forces and torques

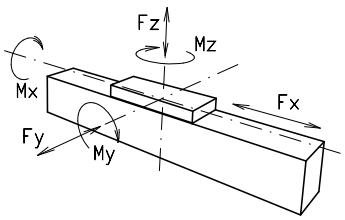

Size	120		160		200	
permitted dyn. Forces*	5000 km	10000 km	5000 km	10000 km	5000 km	10000 km
F_Y (N)	1776	1405	2236	1775	5155	4092
F_z (N)	2090	1650	5278	4189	11311	8977
M_x (Nm)	81	64	282	224	752	597
M_y (Nm)	97	77	283	225	813	646
M_z (Nm)	96	76	300	238	862	684
C (N)	2310		7800		22800	
All forces and torques related to the following: existing values / table values	$\frac{Fy}{Fy_{dyn}} + \frac{Fz}{Fz_{dyn}} + \frac{Mx}{Mx_{dyn}} + \frac{My}{My_{dyn}} + \frac{Mz}{Mz_{dyn}} \leq 1$					
Speed						
(m/sec) max	5		5		5	
Geometrical moments of inertia of aluminium profile						
I_x mm^4	$5{,}61 \times 10^5$		$2{,}13 \times 10^6$		$4{,}81 \times 10^6$	
I_y mm^4	$34{,}19 \times 10^5$		$12{,}33 \times 10^6$		$26{,}0 \times 10^6$	
Elastic modulus N/mm^2	70000		70000		70000	

* referred to life-time

Formula: DSR

Deflection:

$$f = \frac{F^*L^3}{E^*I^*192}$$

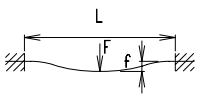

f = deflection (mm)
F = load (N)
L = free length (mm)
E = elastic modulus 70000 (N/mm^2)
I = second moment of area (mm^4)

Nominal lifetime:

$$L = \left(\frac{C}{F}\right)^3 x10^5$$

L = Lifetime in meter
C = Dynamic load factor (N)
F = Middle load (N)

Modular Linear Actuator
DSR 120, 160, 200

Dimensions (mm)

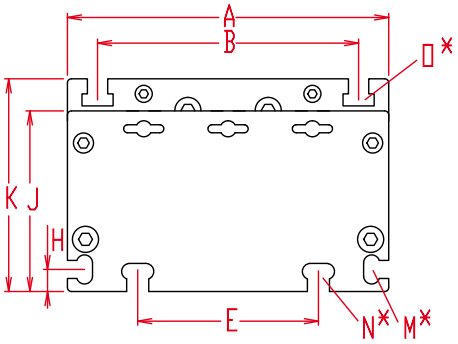

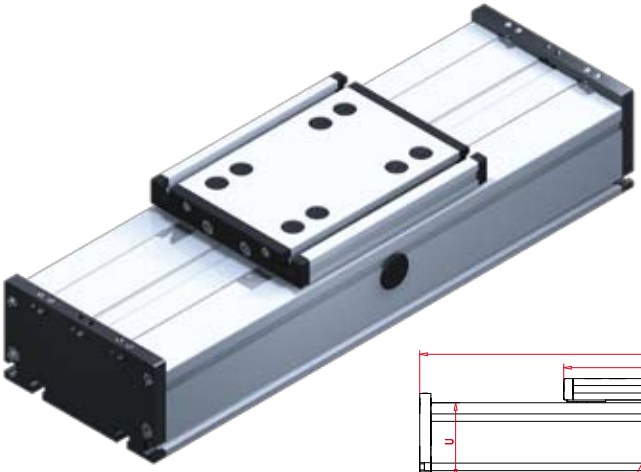

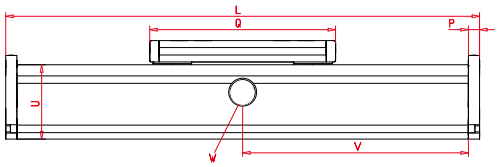

Increasing the carriage length will increase the basic length by the same amount.

*For slide nuts refer to the accessory section V = Q + 100 mm W = servicing position

Size	Basic length L	A	B	E	H	J	K	M for	N for	O for	P	Q	U	Basic weight	Weight per 100 mm
DSR 120	200	120	96	78	10	68	79	M 5	M 6	M 6	10	156	60	3,2 kg	0,71 kg
DSR 160	240	160	130	90	11	90	106	M 6	M 8	M 8	12	200	80	7,0 kg	1,5 kg
DSR 200	320	200	160	140	15	110	129	M 8	M 10	M 10	15	270	100	15,0 kg	2,9 kg

Choice of guide body profile:

0

(0)

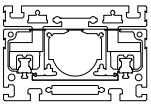

internal profile
with cover bands

(1)

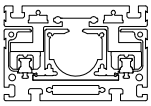

internal profile
without cover bands

(2)

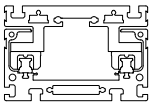

without internal profile
and cover bands

(3)

with bellows

Stainless versions upon request.

Choice of carriages:

0

(0)

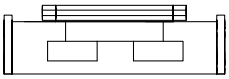

(1)

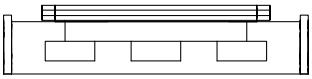

Size	Version 0		Version 1	
	Q	L	Q	L
120	156	200	156	200
160	200	240	>230	>270
200	270	320	>310	>360

8.1

1500

Basic Length + Stroke + Overtravel** = total length
**Minimum 25mm on each end

DSR	160	0	0	0	0	0	0	0	01500
	Pos.	1	2	3	4	5	6	7	

Inductive proximity switch sets, which can be mounted inside of the square profile, are available as accessories. Coupling and a special plug are mounted from the outside. For additional accessories refer to the accessory section.

Sample ordering code:
DSR160, with internal profile and cover bands, standard runner blocks, 1260 mm stroke.

Possible Mounting Styles

DS-units

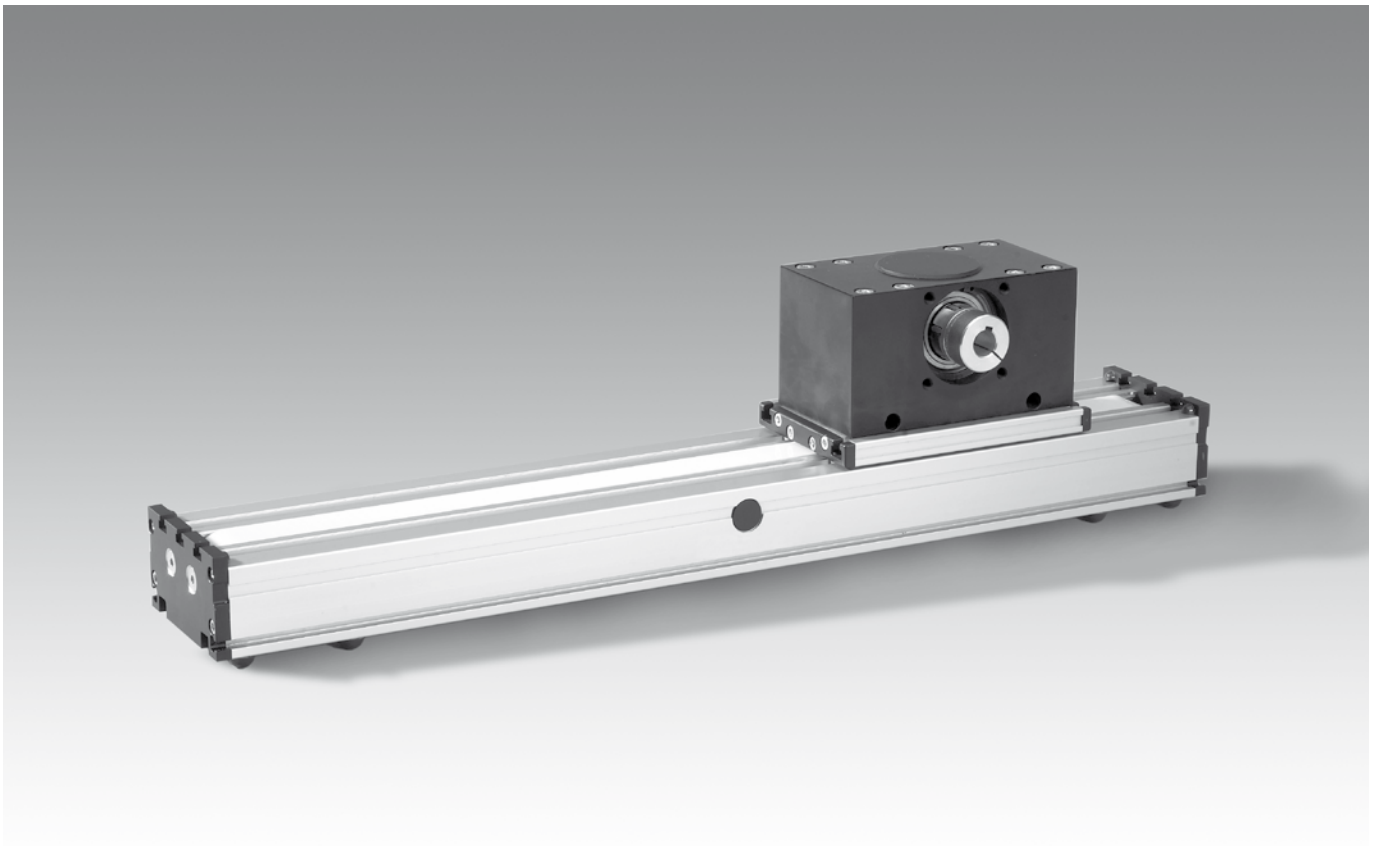

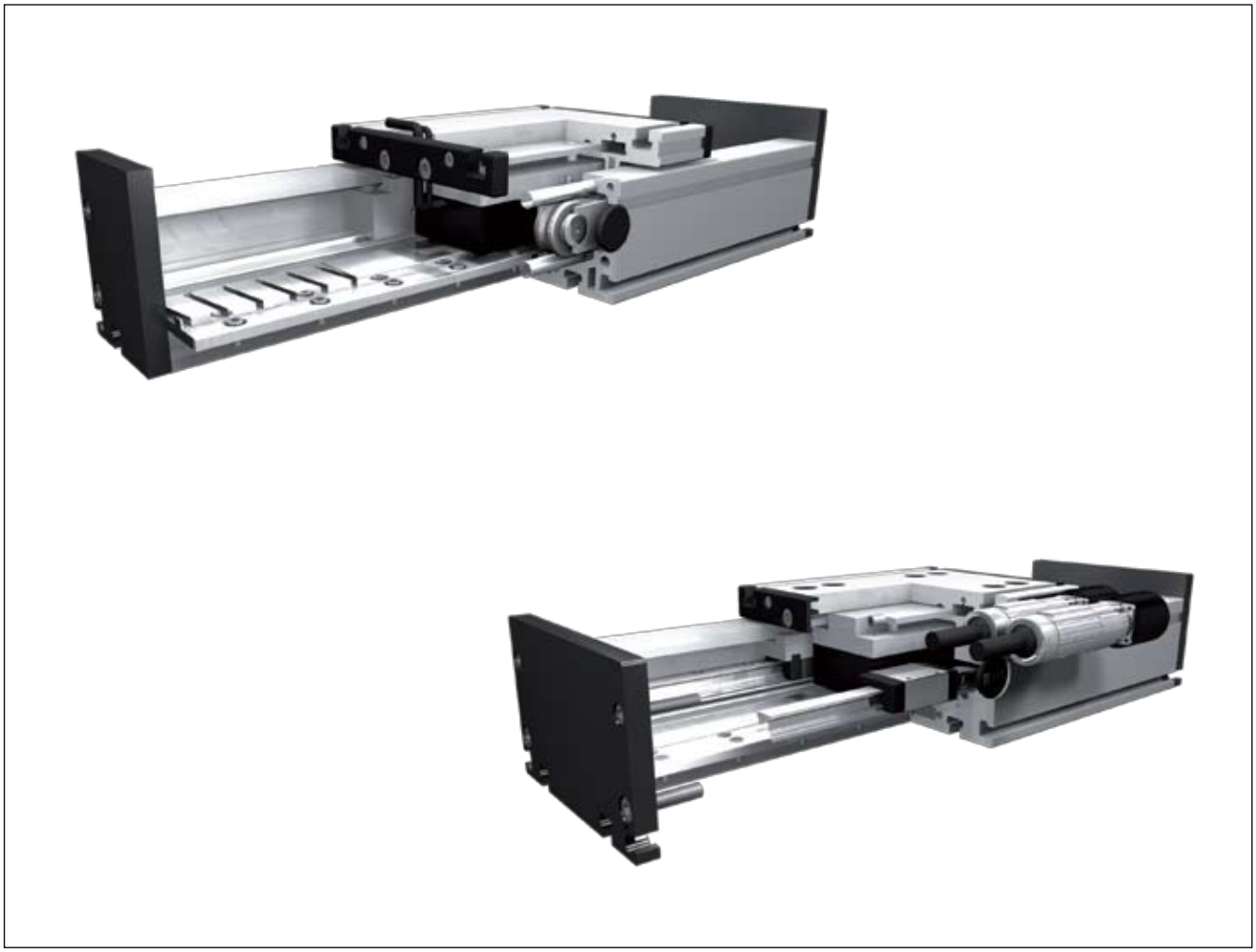

Roller Guide
Modular Linear Actuators
DLM, DLVM

Rail Guide
Modular Linear Actuators
DSM

Modular Linear Actuator
DLM 120, 160, 200

Linear Motor Drive **Specifications**

Function:
This unit consists of a rectangular aluminium profile with 2 integrated roller guides. The linear motor DLM unit is based on the principle of a linear, synchronous AC motor. The guiding profile is fitted with permanent magnets as stator (secondary part). The carriage is fitted with the actuator (primary part). The magnetic attraction causes a force between carriage and guiding profile also in the absence of current. This force can be used for the initial tension of the bearings. Several carriages (primary parts) can be driven independently on one guiding profile.

Fitting position: As required. Max. length 6.000 mm without joints.
Carriage mounting: By T-slots.
Unit mounting: By T-slots and mounting sets. The linear axis can be combined with any T-slot profile.
Carriage support: In the standard version, the carriage runs on 10 or 12 rollers which can be adjusted and serviced at a central servicing position. For longer carriages the number of rollers can be increased.
Repeatability ± 0,05 mm. Repeated accuracy max. ± 0,05 bis 4.000 mm, ± 0,1 >4.000 mm.

Forces and torques

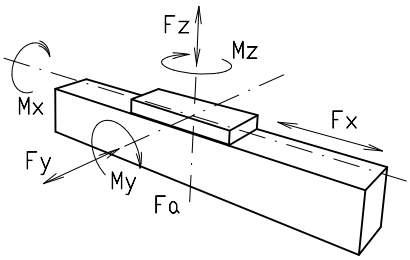

Size	120			160			200		
Motor size	1	2	3	1	2	3	1	2	3
Forces/Torques $_{dyn}$									
F_a (N)	600	1200	1800	1200	1800	5500	3600	5500	11000
F_{zm} (N)	820	1640	2460	1590	8800	7030	5000	7500	13800
F_y (N)	700	700	470	1500	1000	450	3300	2200	1200
M_x (Nm)	180	90	60	280	190	130	600	400	220
M_y (Nm)	50	100	70	320	210	140	640	420	230
M_z (Nm)	22	33	50	90	100	120	200	170	210
Number of rollers	10	12	12	12	12	12	12	12	12
All forces and torques related to the following: existing values / table values $\frac{Fy}{Fy_{dyn}} + \frac{Fzm}{Fzm_{dyn}} + \frac{Mx}{Mx_{dyn}} + \frac{My}{My_{dyn}} + \frac{Mz}{Mz_{dyn}} \leq \mathbf{1,5}$									
Motor specifications Fx									
Motor size	1	2	3	1	2	3	1	2	3
Carriage weight (kg)	1,7	2,5	3,1	5,1	4,7	5,4	9,4	10,5	12,7
Weight primary part (kg)	0,7	1,4	2,0	1,4	3,7	5,2	4,5	6,4	8,4
permanent (N)	61	115	173	115	271	406	383	574	766
Max. (N) (1sek.)	162	323	485	323	607	911	868	1301	1735
Moving force without current									
N	3	5	6	5	8	9	7	**11**	12
Speed									
(m/sec) max	4			6			6		
Geometrical moments of inertia of aluminium profile									
I_x mm^4	$6,6 \times 10^5$			$22,2 \times 10^5$			$63,8 \times 10^5$		
I_y mm^4	$38,6 \times 10^5$			$122,0 \times 10^5$			$335,0 \times 10^5$		
Elastic modulus N/mm^2	70000			70000			70000		

Formula: DLM

$$f = \frac{F \cdot L^3}{E \cdot I \cdot 192}$$

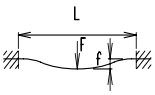

f = deflection (mm)
F = load (N)
L = free length (mm)
E = elastic modulus 70000 (N/mm^2)
I = second moment of area (mm^4)

Modular Linear Actuator
DLM 120, 160, 200

Dimensions (mm)

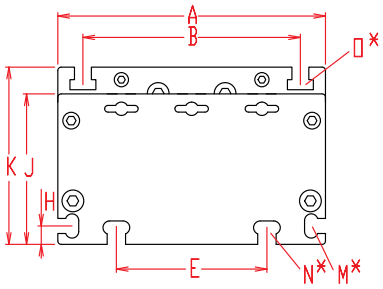

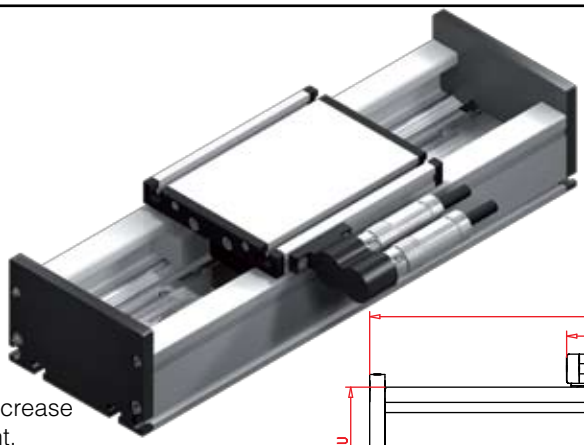

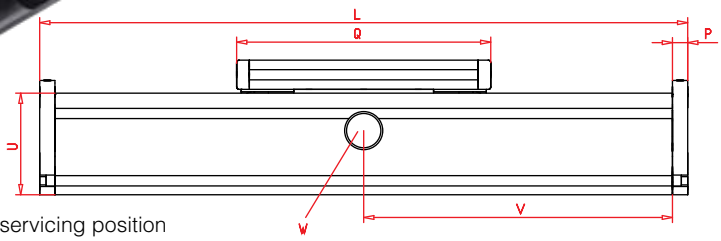

Increasing the carriage length will increase the basic length by the same amount.

*For slide nuts refer to the accessory section V = Q + 100 mm W = servicing position

Size	Basic length L	A	B	E	H	J	K	M for	N for	O for	P	U	Basic weight Motor size 1/2/3	Weight per 100 mm Motor size 1/2/3
DLM 120	Q + 30	120	96	78	10	68	79	M 5	M 6	M 6	10	60	5,2/7,2/9,2 Kg	1,0/1,0/1,0 Kg
DLM 160	Q + 30	160	130	90	11	90	106	M 6	M 8	M 8	12	80	12,6/15,6/20,7 Kg	1,6/2,0/2,0 Kg
DLM 200	Q + 35	200	160	140	15	110	129	M 8	M 10	M 10	15	100	26,9/30,5/37,9 Kg	2,6/2,6/2,6 Kg

0 **Choice of guide body profile:**

(0)

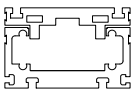

without internal profile and cover bands

(1)

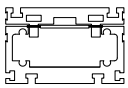

without internal profile with cover bands (L max. 2000mm)

(3)

with bellows

Stainless version upon request.

1 **Measurement system**

(1) Measurement system LE100 5V Resolution 0.05 **(2)** Measurement system LE100 24V Resolution 0.05 **(3)** Hall sensor **(4)** Measurement system provided by customer

1 **Plug**

(1) Plug Pos. 1 **(2)** Plug Pos. 2 **(3)** open unconnected cable end

1 **Motor size**

(1) Motor size 1 with Q_1 **(2)** Motor size 2 with Q_2 **(3)** Motor size 3 with Q_3

(4) Supply with Q_1* **(5)** Supply with Q_2* **(6)** Supply with Q_3*

* = provided by customer

Dimensioning criteria for motor output						
	$l_p \leq$	$b_p \leq$	$h_{ps} \leq$	Q_1	Q_2	Q_3
120	**Q - 70**	**55**	**38**	**196**	**276**	**372**
160	**Q - 70**	**71**	**50**	**316**	**360**	**461**
200	**Q - 70**	**85**	**62**	**410**	**444**	**610**

l_p = length primary part; b_p = width primary part;

h_{ps} = height primary part + height secondary part + interspaces primary-/secondary part

For standard carriage length see 'Q' in table.
For digital controllers and linear encoder refer to chapter 9.1 page 8 .

1500

Basic Length + Stroke + Overtravel** = total length
**Minimum 25mm on each end

DLM	160	0	0	1	1	0	0	1	01500
	Pos.	1	2	3	4	5	6	7	

Sample ordering code:
DLM160, Bahr Modultechnik Linearmotor, standard body profile, Measurement system LE100 5V, Plug Pos. 1, motor size 1, 1154 mm stroke.

Modular Linear Actuator DLVM 200

Linear motor drive **Specifications**

Function:
This unit consists of a rectangular aluminium profile with 2 integrated roller guides. The linear motor DLVM unit is based on the principle of a linear, synchronous AC motor.
The guiding profile is fitted with permanent magnets as stator (secondary part). The carriage is fitted with the actuator (primary part). The magnetic attraction causes a force between carriage and guiding profile also in the absence of current. This force can be used for the initial tension of the bearings. Several carriages (primary parts) can be driven independently on one guiding profile.

Fitting position: As required. Max. length 6.000 mm without joints.
Carriage mounting: By T-slots.
Unit mounting: By T-slots and mounting sets. The linear axis can be combined with any T-slot profile.
Carriage support: In the standard version, the carriage runs on 8 rollers which can be adjusted and serviced at a central servicing position. For longer carriages the number of rollers can be increased.
Repeatability ± 0,05 mm. Repeated accuracy max. ± 0,05 bis 4.000 mm, ± 0,1 >4.000 mm.

Forces and torques

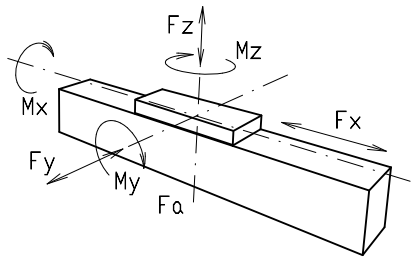

Size	200
Motor size	3
Forces/Torques $_{dyn}$	
F_a (N)	11000
F_{zm} (N)	13800
F_y (N)	1200
M_x (Nm)	220
M_y (Nm)	230
M_z (Nm)	210
Number of rollers	12
All forces and torques related to the following: existing values / table values	$\frac{Fy}{Fy_{dyn}} + \frac{Fzm}{Fzm_{dyn}} + \frac{Mx}{Mx_{dyn}} + \frac{My}{My_{dyn}} + \frac{Mz}{Mz_{dyn}} \leq 1{,}5$
Motor specifications Fx	
Motor size	3
Carriage weight (kg)	12,7
Weight primary part (kg)	8,4
permanent (N)	766
Max. (N) (1sek.)	1735
Moving force without current	
N	12
Speed	
(m/sec) max	6
Geometrical moments of inertia of aluminium profile	
I_x mm^4	6,38x10^6
I_y mm^4	33,5x10^6
Elastic modulus N/mm^2	70000

Formula: DLVM

$$f = \frac{F*L^3}{E*I*192}$$

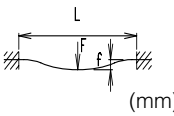

f = deflection (mm)
F = load (N)
L = free length (mm)
E = elastic modulus 70000 (N/mm^2)
I = second moment of area (mm^4)

Modular Linear Actuator
DLVM 200

Dimensions (mm)

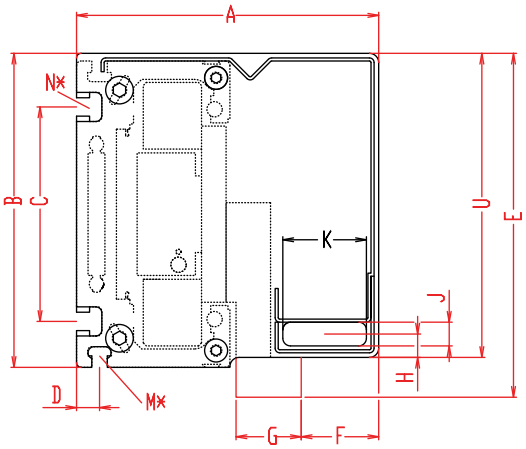

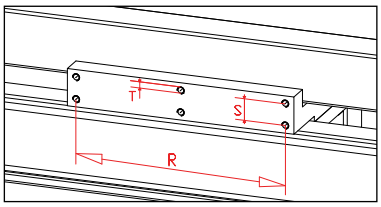

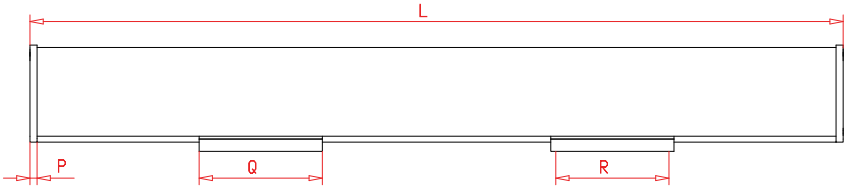

Increasing the carriage length will increase the basic length by the same amount.

*For slide nuts refer to the accessory section

Size	Basic length L	A	B	C	D	E	F	G	H	J	K	M for	N for	P	Q	R	S	T for	U	Basic weight	Weight per 100 mm
DLVM 200	602	197	205	140	15	224,5	50,5	42,5	15	15,5	54,5	M 8	M10	15	260	240	25	M8	198,5	39,4 kg	2,8 kg

									1500
DLVM	**200**	**0**	**0**	**0**	**0**	**0**	**0**	**1**	**01500**
	Pos.	1	2	3	4	5	6	7	

Basic Length + Stroke + Overtravel** = total length
**Minimum 25mm on each end

Sample ordering code:
DLVM200, 898 mm stroke.

9.1

Modular Linear Actuator
DSM 120, 160, 200

Linear Motor Drive **Specifications**

Function:
This unit consists of a rectangular aluminium profile with 2 integrated rail guidance. The linear motor DSM unit is based on the principle of a linear, synchronous AC motor.
The guiding profile is fitted with permanent magnets as stator (secondary part). The carriage is fitted with the actuator (primary part). The magnetic attraction causes a force between carriage and guiding profile also in the absence of current. This force can be used for the initial tension of the bearings. Several carriages (primary parts) can be driven independently on one guiding profile.

Fitting position: As required. Max. length 6.000 mm without joints.
Carriage mounting: By T-slots.
Unit mounting: By T-slots and mounting sets. The linear axis can be combined with any T-slot profile.
Carriage support: In the standard version, the carriage runs on 4 runner blocks which can be serviced at a central servicing position. For longer carriages the number of runner blocks can be increased.
Repeatability ± 0,05mm mm. Repeated accuracy max. ± 0,05mm bis 4.000 mm, ± 0,1 >4.000 mm.

Forces and torques

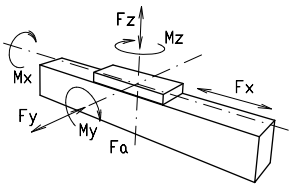

Size	120		160			200		
Motor size	1	2	1	2	3	1	2	3
permitted dyn.Forces*	10000 km		10000 km			10000 km		
F_a (N)	600	1200	1200	1800	5500	3600	5500	11000
F_{zm} (N)	820	1640	1590	2800	7030	4990	7640	13860
F_z (N)	650	500	1775	1775	3550	4092	4092	8184
M_x (Nm)	35	32	160	128	153	357	231	462
M_y (Nm)	40	58	373	351	532	769	556	1540
M_z (Nm)	40	57	222	261	328	585	654	906
C (N)	2310		7800			22800		
Number of runner blocks	6	8	4	4	8	4	4	8

All forces and torques related to the following:

existing values / table values

$$\frac{Fy}{Fy_{dyn}} + \frac{Fzm}{Fzm_{dyn}} + \frac{Mx}{Mx_{dyn}} + \frac{My}{My_{dyn}} + \frac{Mz}{Mz_{dyn}} \leq \mathbf{1,5}$$

Motor specifications Fx

Motor size	1	2	1	2	3	1	2	3
Carriage weight (kg)	1,4	2,7	4,8	5,3	7,1	10,9	11,4	16,9
Weight primary part (kg)	0,7	1,4	1,4	3,7	5,2	4,5	6,4	8,4
permanent (N)	61	115	115	271	406	383	574	766
Max. (N) 1sec.	162	323	323	607	911	868	1301	1735
Moving force without current								
N	15	15	30	30	60	40	40	80
Geometrical moments of inertia of aluminium profile								
I_x mm^4	5,60 x10^5		2,13 x10^6			4,81 x10^6		
I_y mm^4	34,19 x10^5		12,3 x10^6			26,0 x10^6		
Elastic modulus N/mm^2	70000		70000			70000		

Formula: DSM

Deflection:

$$f = \frac{F*L^3}{E*I*192}$$

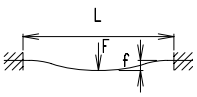

f = deflection (mm)
F= load (N)
L= free length (mm)
E= elastic modulus 70000 (N/mm^2)
I = second moment of area (mm^4)

Nominal lifetime:

$$L = \left(\frac{C}{F}\right)^3 \quad x10^5$$

C = Dynamic load faktor(N)
F = Middle load (N)

* referred to life-time

Modular Linear Actuator
DSM 120, 160, 200

Dimensions (mm)

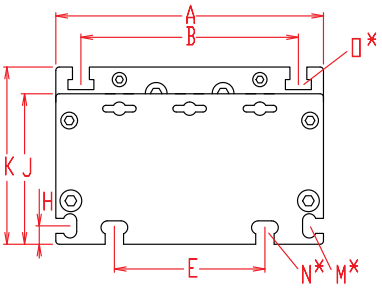

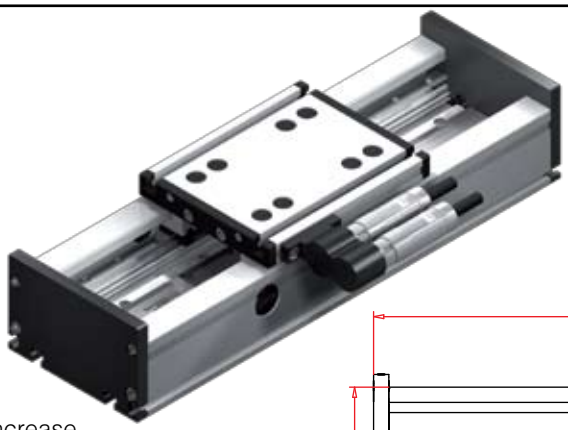

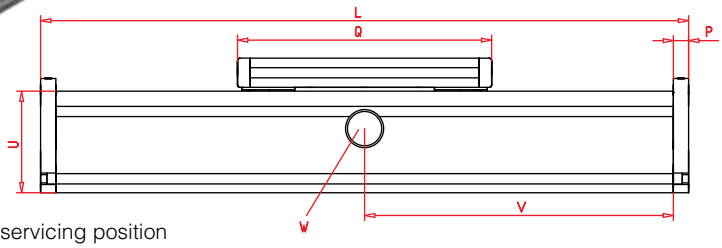

Increasing the carriage length will increase the basic length by the same amount.

*For slide nuts refer to the accessory section V = Q + 100 mm W = servicing position

Size	Basic length L	A	B	E	H	J	K	M for	N for	O for	P	U	Basic weight Motor size 1/2/3	Weight per 100 mm Motor size 1/2/3
DSM 120	Q + 30	120	96	78	10	68	79	M 5	M 6	M 6	10	60	4,8/6,9 kg	1,0/1,0
DSM 160	Q + 30	160	130	90	11	90	106	M 6	M 8	M 8	12	80	12,4/16,7/22,6 kg	1,7/2,0/2,0 kg
DSM 200	Q + 35	200	160	140	15	110	129	M 8	M 10	M 10	15	100	30,0 /33,0 /44,2kg	3,1/3,1/3,1 kg

0 **Choice of guide body profile:**

(0)

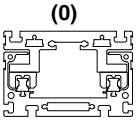

without internal profile and cover bands

Stainless version upon request.

(1)

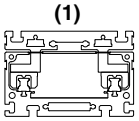

without internal profile with cover bands (L max. 2000mm)

(3)

with bellows

1 **Measurement system**

(1) Measurement system LE100 5V Resolution 0.05 **(2)** Measurement system LE100 24V Resolution 0.05 **(3)** Hall sensor **(4)** Measurement system provided by customer

1 **Plug**

(1) Plug Pos. 1 **(2)** Plug Pos. 2 **(3)** open unconnected cable end

1 **Motor size**

(1) Motor size 1 with Q_1 **(2)** Motor size 2 with Q_2 **(3)** Motor size 3 with Q_3

(4) Supply with Q_1* **(5)** Supply with Q_2* **(6)** Supply with Q_3*

* = provided by customer

Dimensioning criteria for motor output						
	l_p ≤	b_p ≤	h_{ps} ≤	Q_1	Q_2	Q_3
120	Q - 70	55	38	196	276	-
160	Q - 70	71	50	316	360	461
200	Q - 70	85	62	410	444	610

l_p = length primary part; b_p = width primary part;
h_{ps} = height primary part + height secondary part + interspaces primary-/secondary part

1500 Basic Length + Stroke + Overtravel** = total length
**Minimum 25mm on each end

For standard carriage length see 'Q' in table. The carriages can be delivered in any non-standard length upon request; the longer the carriage, the greater the load capacity. For digital controllers and linear encoder refer to chapter 9.1 page 8 .

DSM	160	0	0	1	1	0	0	1	01500
	Pos.	1	2	3	4	5	6	7	

Sample ordering code:
DSM160, Bahr Modultechnik Linear motor, standard body profile, Measurement system LE100 5V, Plug Pos. 1, motor size 1, 1154 mm stroke

Linear Motor Controller for DLM - DSM Modular Linear Actuator

Linear Encoder LE100

Non-contact sensor unit with integrated analog signal output (sinus 1 Vss).
Forming an open linear measuring system if combined with magnetic strip and downstream interpolation electronics.

Features:
+ easy mounting
+ insensitive to dust, shavings, humidity
+ signal period 1000 µm (analog)
+ output signals 1 Vss nominal
+ real-time data processing
+ used in combination with magnetic strip MB100

Specifications:

+ Supply voltage	12-24 V DC +/- 20% / 5V optional 5 V DC +/- 5%
+ Power consumption	approx. 30 mA non-loaded
+ Protection	reverse battery protection
+ Connection	flying leads
+ Material of casing	plastic
+ Output circuit	line driver
+ Output signals	sinusA, B, phase-shifted by 90°
+ Output current	I out max. 5 mA per signal path
+ Signal size	approx. 1 Vss
+ Travel speed	max. 5m/s
+ System accuracy	depending on interpolation electronics
+ Gap strip/sensor	0,1 - 0,4 mm (without cover strip)
+ Working temperature	0....+50 °C
+ Storage temperature	-20....+85°C
+ Interference protection class	3, accord. to ICE 801
+ Test mark	CE
+ System of protection	IP 67 accord. to DIN VDE 0470

Possible Mounting Styles

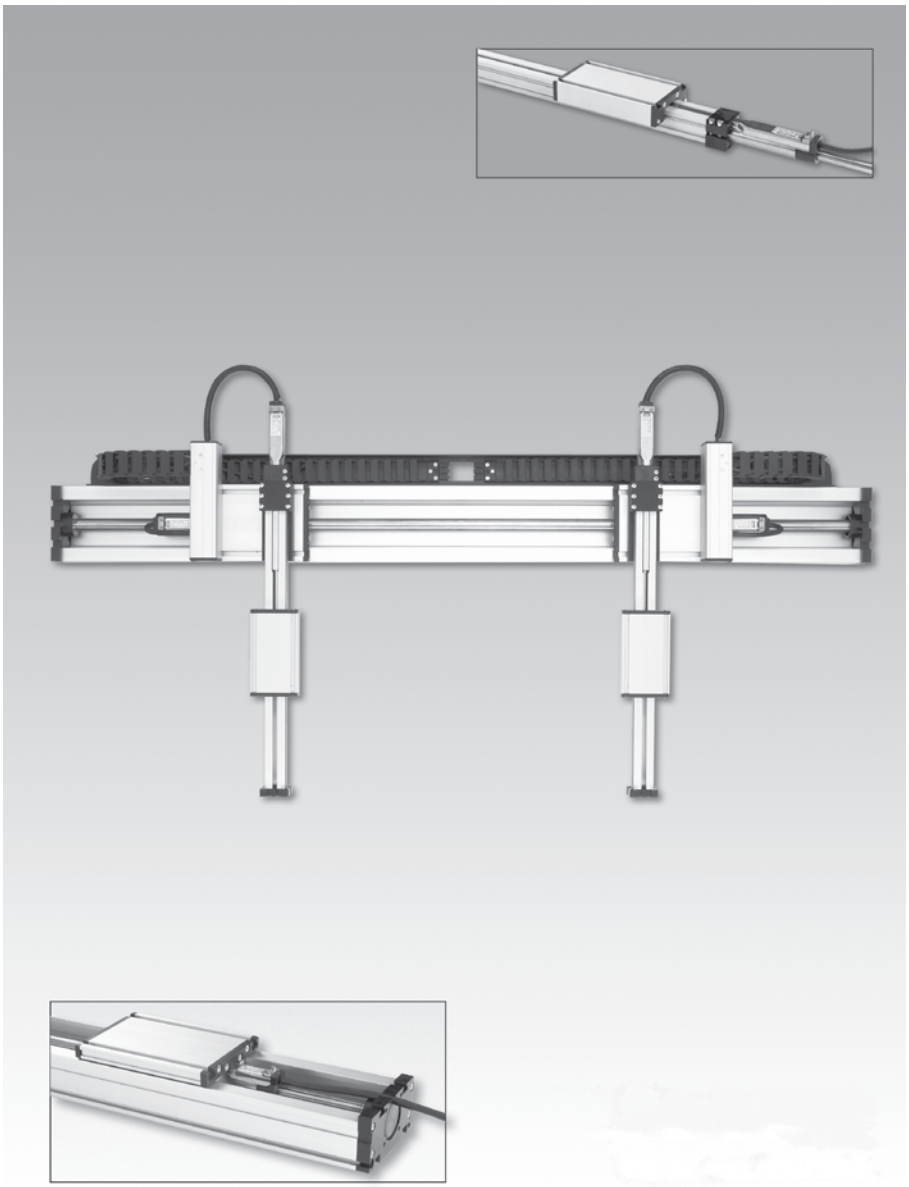

nookindustries.com toll-free 1 (800) 321-7800
www.nookindustries.ru (499) 703 35 98 sell@nookindustries.ru

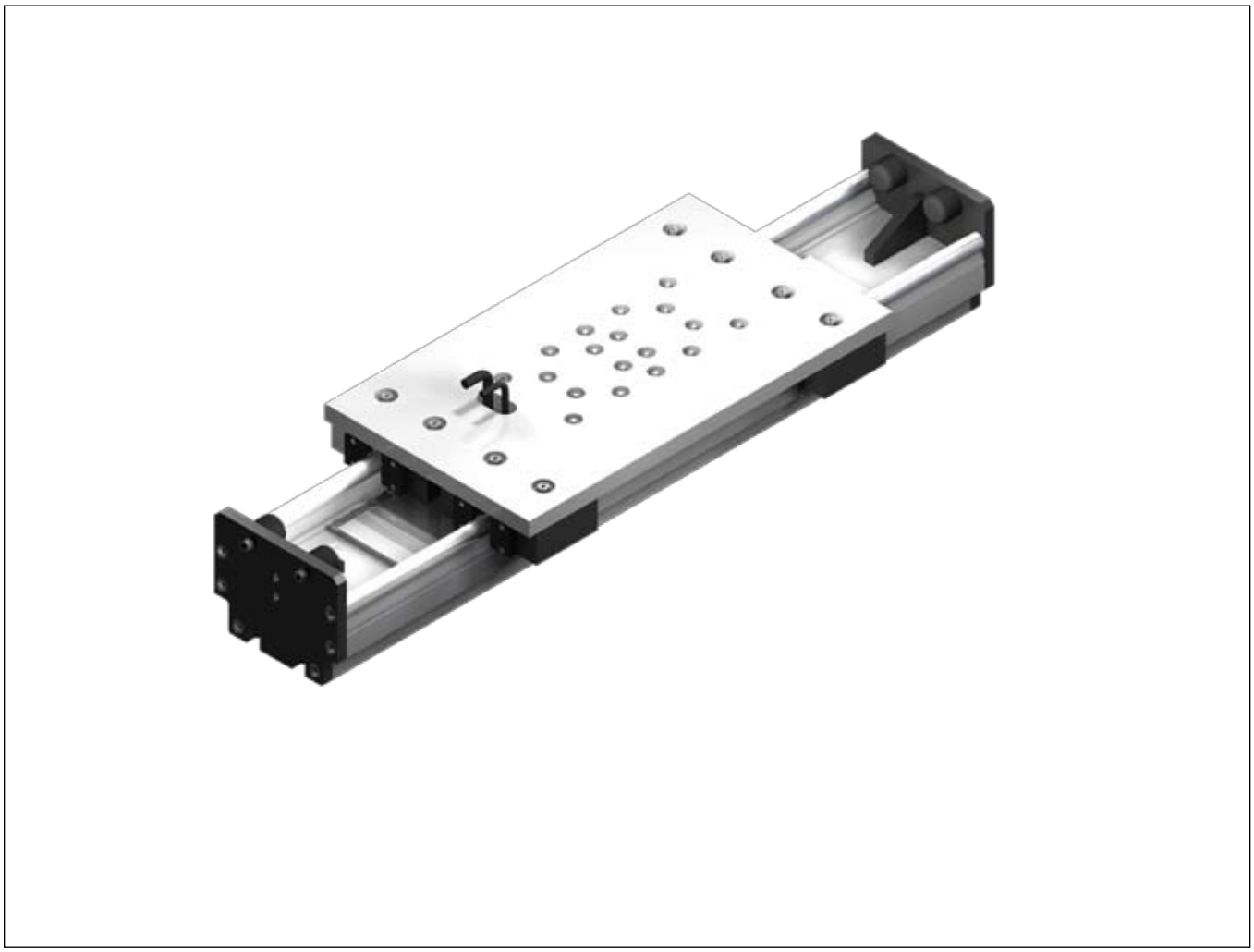

Roller Guide
Modular Linear Actuators
ALLM, ALLZ, ALLR

Modular Linear Actuator
ALLM 203, 204

Linear Motor Drive

Specifications

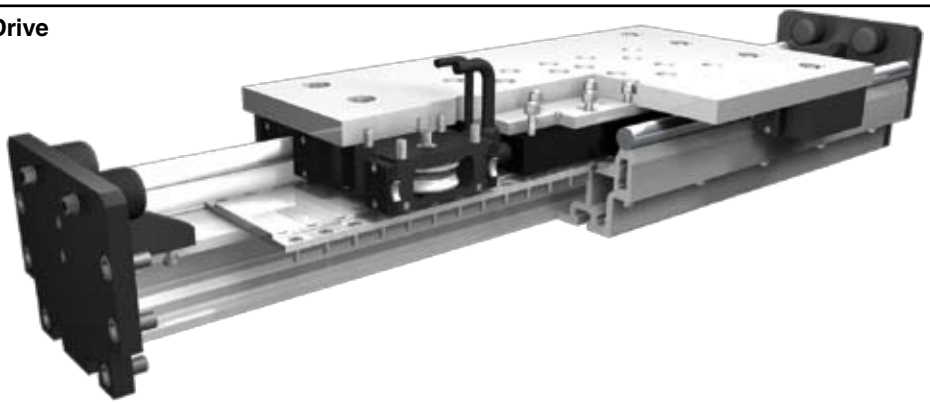

Function:
This unit consists of an aluminium profile with hardened steel guide rods mounted on top of the profile. The carriage, which has internal linear ball bearings that can be adjusted free of play, moves along the unit. The linear-motor ALLM unit is based on the principle of a linear, synchronous AC motor.
The guiding profile is fitted with permanent magnets as stator. The carriage is fitted with the actuator. The magnetic attraction causes a force between carriage and guiding profile also in the absence of current. This force can be used for the initial tension of the bearings. Several carriages can be driven independently on one guiding profile.

Fitting position: As required. Max. length 7.600 mm without joints.
Carriage mounting: By tapped holes.
Unit mounting: By T-slots and mounting sets. The linear axis can be combined with any T-slot profile.
Carriage support: In the standard version, the carriage runs on 8 rollers which can be adjusted and serviced.
For longer carriages the number of rollers can be increased.
Repeatability ± 0,05 mm.

Forces and torques

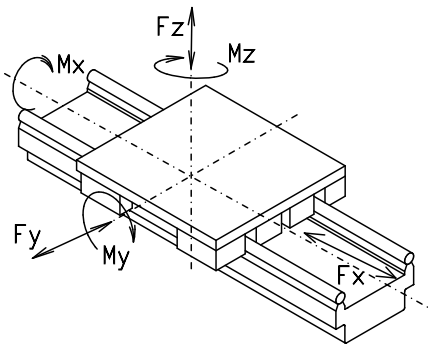

Size	ALLM 203		ALLM 204	
Forces/Torques	static	dynamic	static	dynamic
F_y (N)	23000	18400	30000	24000
F_z (N)	11000	8800	16250	13000
M_x (Nm)	1200	950	1870	1500
M_y (Nm) Motor 1	3060	2450	5000	4000
M_z (Nm) Motor 1	6250	5100	9500	7600
M_y (Nm) Motor 2	4010	3210	6520	5220
M_z (Nm) Motor 2	8340	6670	12180	9750
All forces and torques related to the following: existing values / table values $\frac{Fy}{Fy_{dyn}} + \frac{Fz}{Fz_{dyn}} + \frac{Mx}{Mx_{dyn}} + \frac{My}{My_{dyn}} + \frac{Mz}{Mz_{dyn}} \leq 1$				
Transverse force without current				
N	35		45	
Moved mass (g) without motor	43	48	55	62
Speed				
Motor size / weight (kg)	1 / 17,2	2 / 25,5	1 / 17,2	2 / 25,5
(m/sec) max	8	8	8	8
Thrust				
permanent (N)	2600	3900	2600	3900
Max. (N)	4000	6010	4000	6010
Geometrical moments of inertia of aluminium profile				
I_x mm^4	$2,26 \times 10^7$		$2,98 \times 10^7$	
I_y mm^4	$8,75 \times 10^7$		$10,22 \times 10^7$	
Elastic modulus N/mm^2	70000		70000	

Formula: ALLM

$$f = \frac{F*L^3}{E*I*192}$$

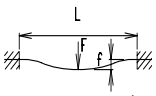

f = deflection (mm)
F = load (N)
L = free length (mm)
E = elastic modulus 70000 (N/mm^2)
I = second moment of area (mm^4)

Modular Linear Actuator
ALLM 203, 204

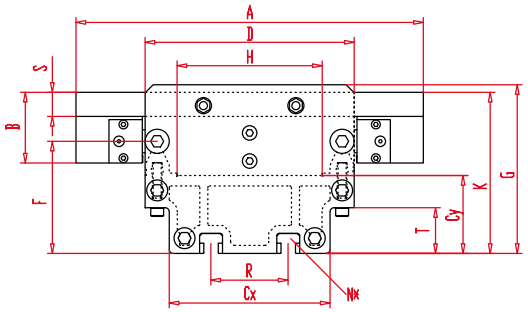

Increasing the carriage length will increase the basic length by the same amount.

Dimensions (mm)

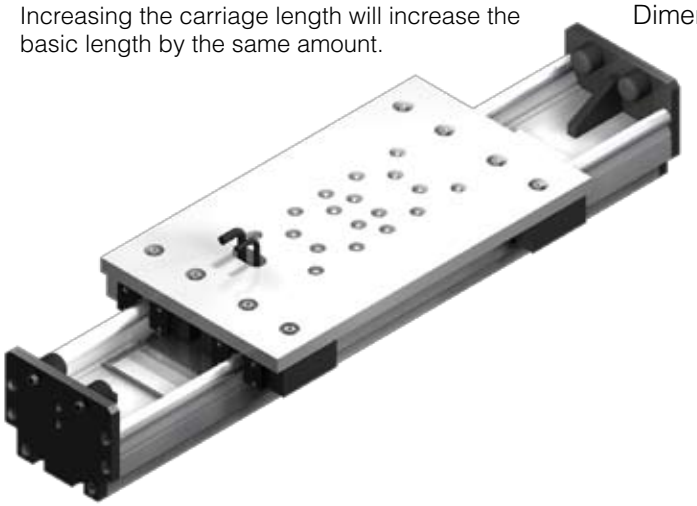

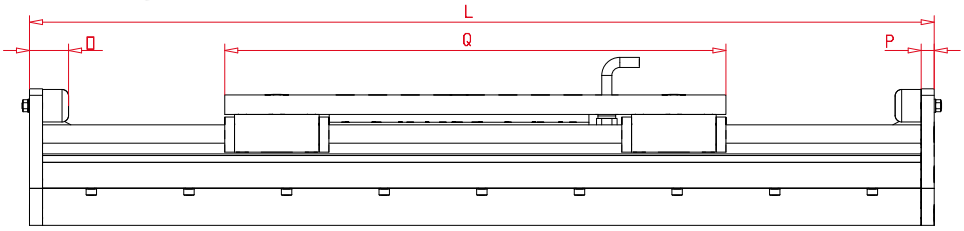

Size	Basic length L motor size 1 / 2	A	B	Cx	Cy	D	F	G	H	K	N for	O	P	Q motor size 1 / 2	R	S	T	Basic weight motor size 1 / 2	Weight per 100 mm
ALLM 203	865/1050	432	88	200	97	260	139,6	210	180,5	200,5	M16	60	20	745/930	96	30	57	110 / 136 kg	5,6 kg
ALLM 204	925/1110	480	102,5	200	97	270	139,6	210	180,5	217,5	M16	60	20	805/990	96	30	57	136 / 163 kg	6,5 kg

3 **Guide rod size**
(3) Ø=30 **(4)** Ø=40

0 **Choice of guide body profile:**
(0) Standard **(1)** stainless guide rods **(2)** stainless guide rods and screws **(3)** stainless guide rods, rollers and screws

0 **Motor size**
(0) Motor size 1 (LMS-P 58-140 / 370 P -3st- S, weight 17,2 kg)
(1) Motor size 2 (LMS-P 58-140 / 555 P -3st- S, weight 25,5 kg)

Basic Length + Stroke + Overtravel** = total length
**Minimum 25mm on each end

ALLM 20	3	0	0	0	0	0	0	0	2000
	Pos.	1	2	3	4	5	6	7	

Sample ordering code:
ALLM203, guide rods 30 mm, standard body profile, motor size 1, 1135 mm stroke.

Modular Linear Actuator
ALLZ 203, 204

Belt Drive **Specifications**

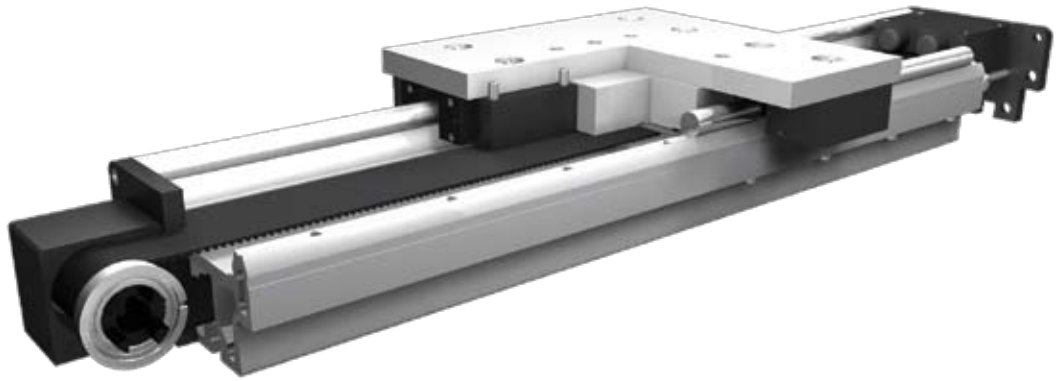

Function:
This unit consists of an aluminium profile with hardened steel guide rods mounted on top of the profile. The carriage, which has internal linear ball bearings that can be adjusted free of play, is driven along the guide rods by a timing belt. The pulleys have maintenance-free ball bearings. Opposite the driven side there is an integrated timing-belt tensioner which can be readjusted by 2 screws.

Fitting position: As required. Max. length 7.600 mm without joints.
Carriage mounting: By tapped holes.
Unit mounting: By T-slots and mounting sets. The linear axis can be combined with any T-slot profile.
Carriage support: In the standard version, the carriage runs on 8 rollers which can be adjusted and serviced at a central servicing position. For longer carriages the number of rollers can be increased. Repeatability ± 0,1.
Belt type: HTD with steel reinforcement, no backlash when changing direction, repeatability: ± 0,1 mm.

Forces and torques

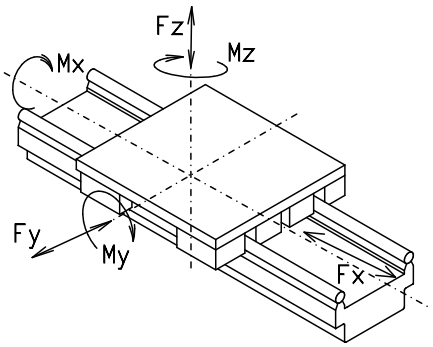

Size	ALLZ 203		ALLZ 204	
Forces/Torques	static	dynamic	static	dynamic
F_x (N)	-	5610	-	5610
F_y (N)	23000	18400	30000	24000
F_z (N)	11000	8800	16200	13000
M_x (Nm)	1180	950	1870	1500
M_y (Nm)	1870	1500	3000	2400
M_z (Nm)	3800	3100	5600	4500
All forces and torques related to the following: existing values / table values	$\frac{Fy}{Fy_{dyn}} + \frac{Fz}{Fz_{dyn}} + \frac{Mx}{Mx_{dyn}} + \frac{My}{My_{dyn}} + \frac{Mz}{Mz_{dyn}} \leq 1$			
No-load torque				
Nm	4		4	
Speed				
(m/sec) max	8		8	
Geometrical moments of inertia of aluminium profile				
I_x mm^4	$2{,}26 \times 10^7$		$2{,}98 \times 10^7$	
I_y mm^4	$8{,}75 \times 10^7$		$10{,}22 \times 10^7$	
Elastic modulus N/mm^2	70000		70000	

Formula: ALLZ
Driving torque:

$$M_a = \frac{F*P*S_i}{2000*\pi} + M_{leer}$$

$$P_a = \frac{M_a*n}{9550}$$

F = force (N)
P = pulley action perimeter (mm)
S_i = safety factor 1,2 ... 2
M_{leer} = no-load torque (Nm)
n = rpm pulley (min^{-1})
M_a = driving torque (Nm)
P_a = motor power (KW)

$$f = \frac{F*L^3}{E*I*192}$$

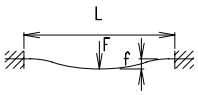

f= deflection (mm)
F = load (N)
L= free length (mm)
E= elastic modulus 70000 (N/mm^2)
I= second moment of area (mm^4)

Modular Linear Actuator
ALLZ 203, 204

Increasing the carriage length will increase the basic length by the same amount.

Dimensions (mm)

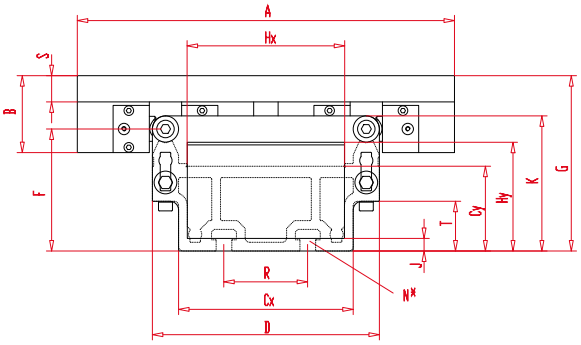

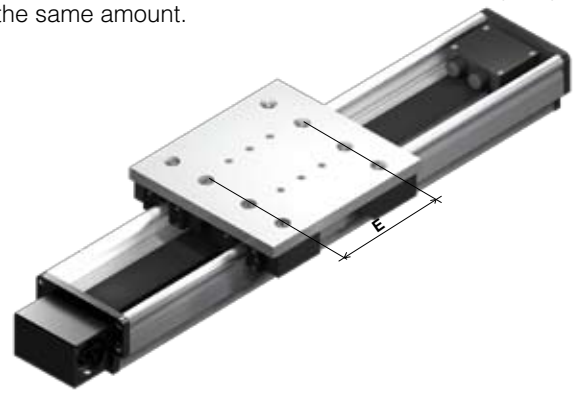

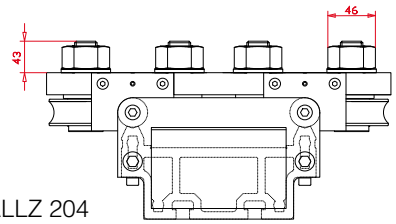

ALLZ 204

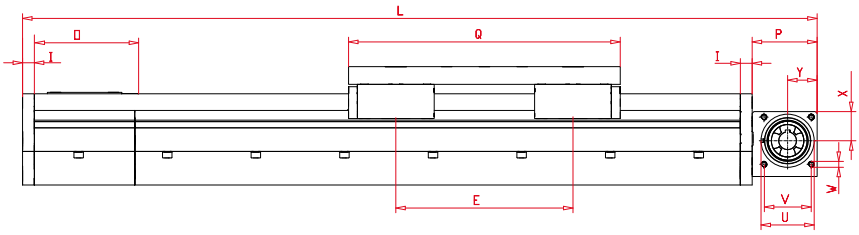

Size	Basic length L	A	B	Cx	Cy	D	E	F	G	Hx	Hy	I	J	K	N for	O	P	Q	R	S	T	U	V	W	X	Y	Basic weight	Weight per 100 mm
ALLZ 203	792	432	88	200	97	260	300	140	200,5	180,5	124,5	20	14,5	154,5	M16	182	110	460	96	30	57	90	80	10	49,5	50	90 kg	4,0 kg
ALLZ 204	822	460	80	200	97	270	355	145	199	180,5	124,5	20	14,5	165	M16	182	110	490	96	30	57	90	80	10	49,5	50	92 kg	4,9 kg

3 **Guide rod size**
(3) Ø=30 **(4)** Ø=40

0 **Choice of guide body profile:**
(0) Standard **(1)** stainless guide rods **(2)** stainless guide rods and screws **(3)** stainless guide rods, rollers and screws

0 **Coupling - shaft mounting:**

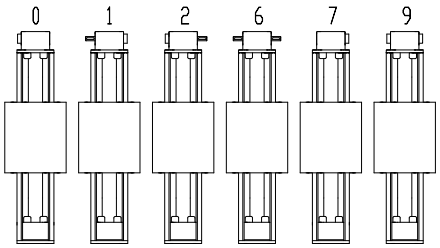

9 is as 0, but with coupling claws on both sides.

Coupling claw on one side

Standard shaft

The standard version is supplied without shaft. A shaft can be retrofitted by inserting it into the pulley bore and securing it with 2 locking rings.

Belt table

Code No.		Belt	mm/rev.	Number of teeth
0	**7**	8M100	224	28

Size	Shaft ø h6 x length	Key
203	30 x 55	8x7x40
204	30 x 55	8x7x40

Basic Length + Stroke + Overtravel** = total length
**Minimum 25mm on each end

ALLZ 20	3	0	0	0	0	0	7	0	2000
	Pos.	1	2	3	4	5	6	7	

Sample ordering code:
ALLZ203, guide rods 30 mm, standard body profile, coupling claw on both side, toothed belt 8M100, 1208 mm stroke.

Modular Linear Actuator ALLR 203, 204

Roller Guide Unit Without Drive **Specifications**

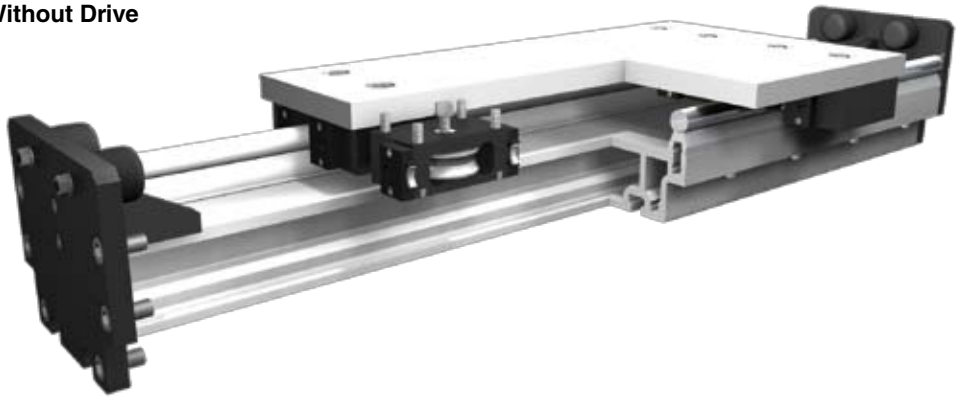

Function:
This unit consists of an aluminium profile with hardened steel guide rods mounted on top of the profile. The carriage has internal linear ball bearings that can be adjusted free of play. The unit is without drive.

Fitting position: As required. Max. length 7.600 mm without joints.
Carriage mounting: By tapped holes.
Unit mounting: By T-slots and mounting sets. The linear axis can be combined with any T-slot profile.
Carriage support: In the standard version, the carriage runs on 8 rollers which can be adjusted and serviced at a central servicing position. For longer carriages the number of rollers can be increased.

Forces and torques

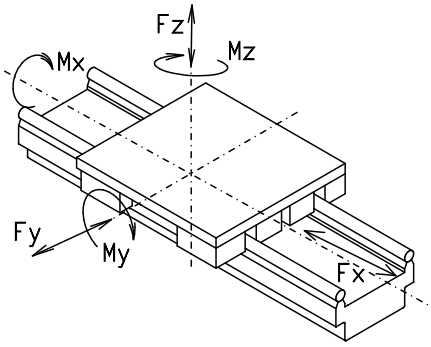

Size	ALLR 203		ALLR 204	
Forces/Torques	static	dynamic	static	dynamic
F_y (N)	23000	18400	30000	24000
F_z (N)	11000	8800	16250	13000
M_x (Nm)	1200	950	1870	1500
M_y (Nm)	1870	1500	3000	2400
M_z (Nm)	3800	3100	5600	4500

All forces and torques related to the following:

existing values / table values

$$\frac{Fy}{Fy_{dyn}} + \frac{Fz}{Fz_{dyn}} + \frac{Mx}{Mx_{dyn}} + \frac{My}{My_{dyn}} + \frac{Mz}{Mz_{dyn}} \leq 1$$

Geometrical moments of inertia of aluminium profile		
I_x mm^4	2,26 x 10^7	2,98 x 10^7
I_y mm^4	8,75 x 10^7	10,22 x 10^7
Elastic modulus N/mm^2	70000	70000

10.1

Formula: ALLR

$$f = \frac{F*L^3}{E*I*192}$$

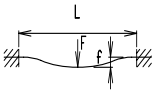

f = deflection (mm)
F = load (N)
L = free length (mm)
E = elastic modulus 70000 (N/mm^2)
I = second moment of area (mm^4)

Modular Linear Actuator
ALLR 203, 204

Increasing the carriage length will increase the basic length by the same amount.

Dimensions (mm)

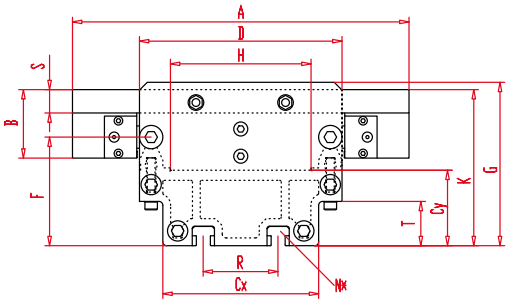

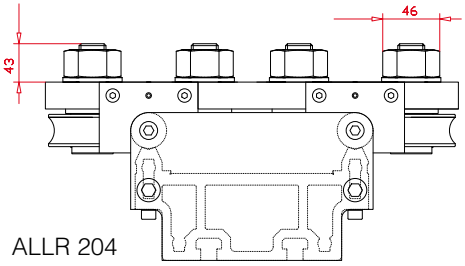

ALLR 204

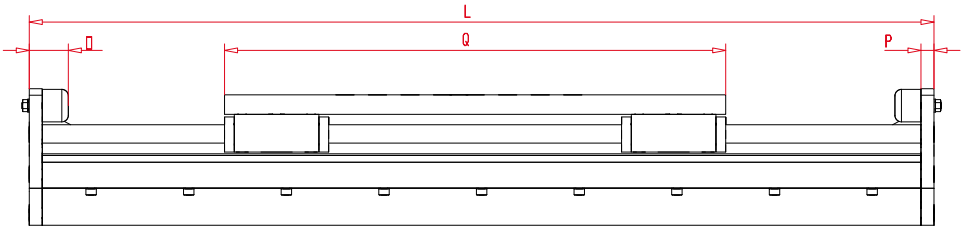

Size	Basic length L	A	B	Cx	Cy	D	F	G	H	K	N for	O	P	Q	R	S	T	Basic weight	Weight per 100 mm
ALLR 203	580	432	88	200	97	260	139,6	210	180,5	200,5	M16	60	20	460	96	30	57	64 kg	3,9 kg
ALLR 204	610	480	102,5	200	97	270	139,6	210	180,5	217,5	M16	60	20	490	96	30	57	65 kg	4,8 kg

Guide rod size
(3) Ø=30 **(4)** Ø=40

Choice of guide body profile:
(0) Standard **(1)** stainless guide rods **(2)** stainless guide rods and screws **(3)** stainless guide rods, rollers and screws

Basic Length + Stroke + Overtravel** = total length
**Minimum 25mm on each end

ALLR20	3	0	0	0	0	0	0	0	2000
	Pos.	1	2	3	4	5	6	7	

Sample ordering code:
ALLR203, guide rods 30 mm, standard body profile, 1420 mm stroke.

Modular Linear Actuator
ALLM/Z

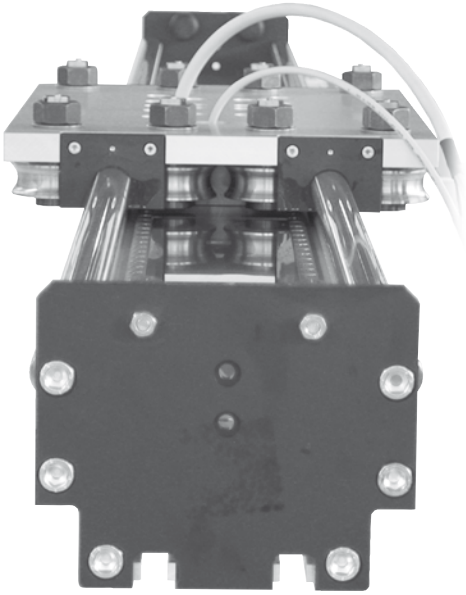

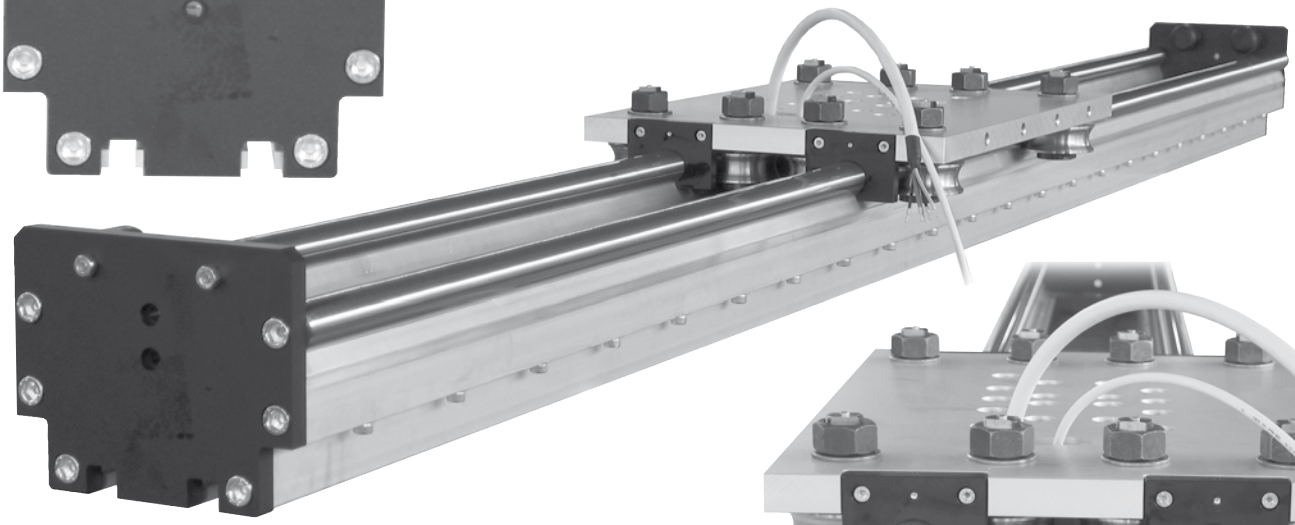

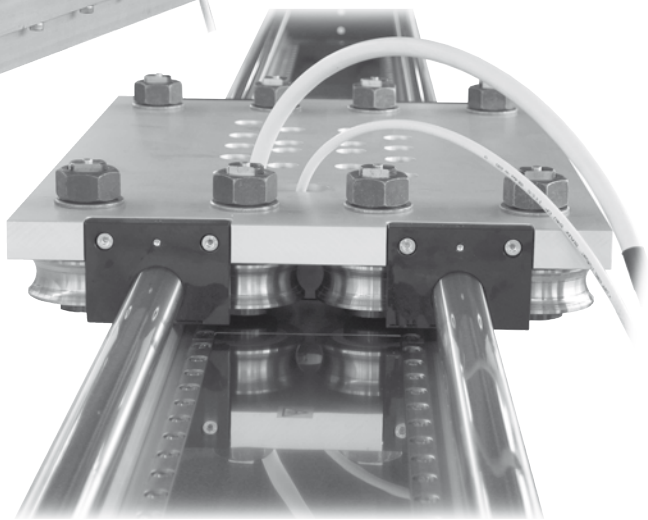

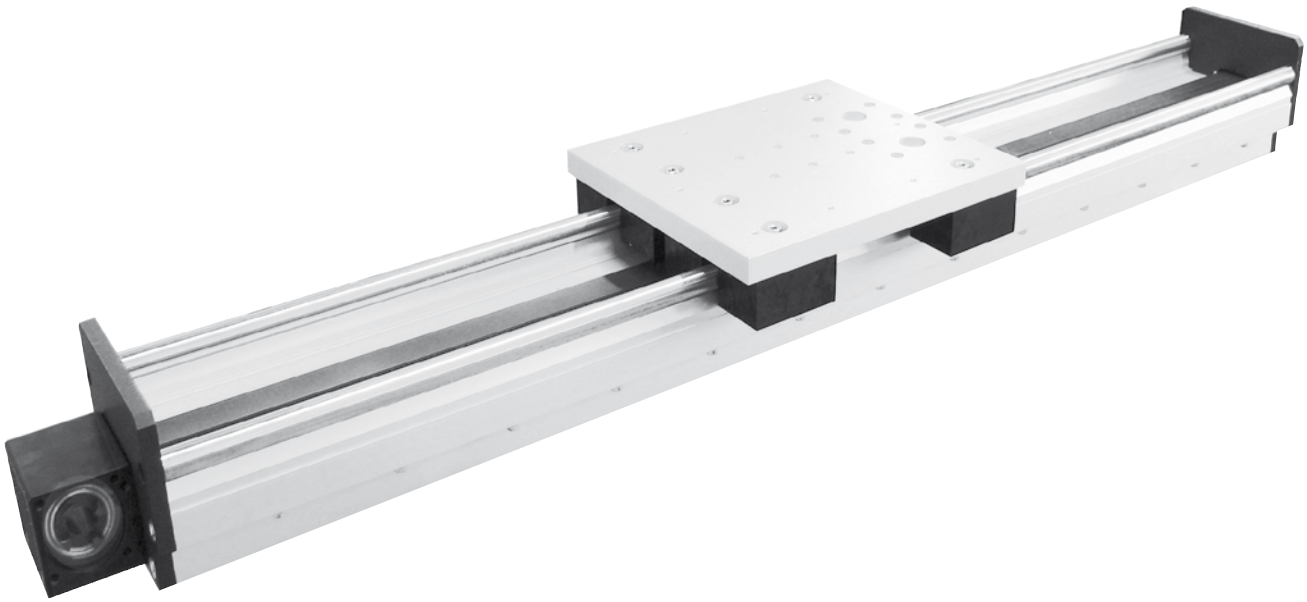

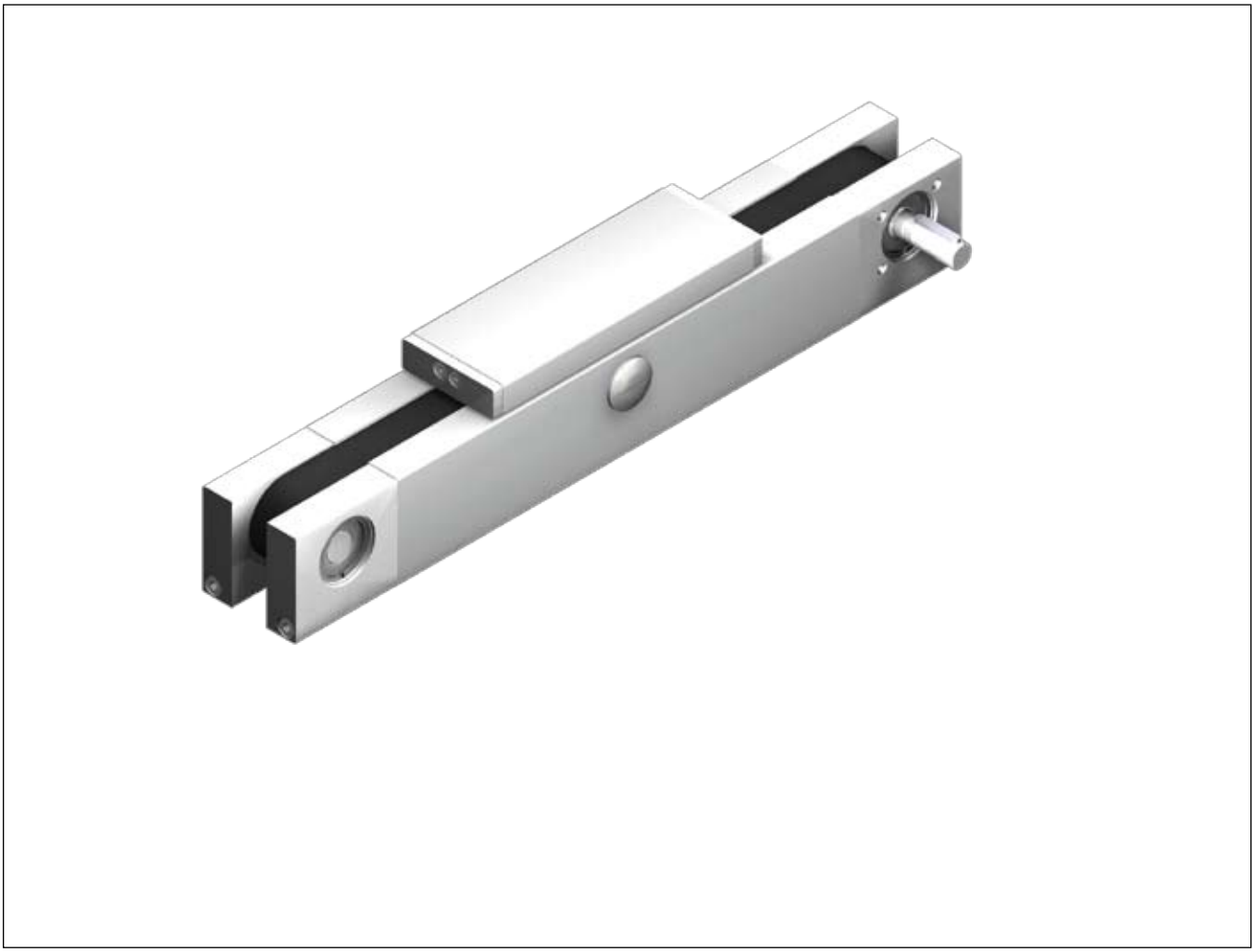

Stainless Steel Modular Linear Actuators QLZE, QSZE, QST/KE

Modular Linear Actuators ELBZ Curve

toll-free 1 (800) 321-7800 nookindustries.com
www.nookindustries.ru (499) 703 35 98 sell@nookindustries.ru

Modular Linear Actuator
QLZE 60, 80, 100

Belt Drive

Specifications

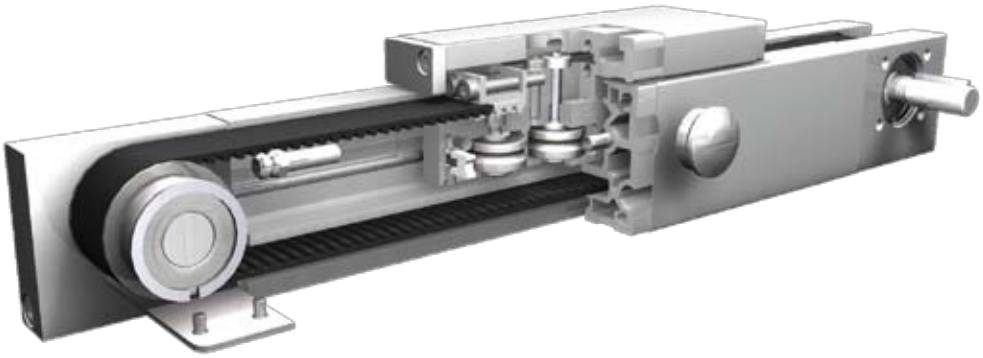

Function:
This unit consists of a square aluminium profile with an integrated roller guide and is covered by a stainless steel sheet (thickness 0.37mm, material 1.4301). The carriage is driven by a timing belt. Belt tension can be readjusted by a simple screw adjustment device in the carriage. This device can also be used for symmetrical adjustment of two or more linear units running parallel. This linear unit is based on the QLZ and is suitable for application in clean rooms of clean-room classification 1000 (corresponding to US Fed. Standard 209 E).

Fitting position: As required. Max. length 3.000 mm without joints.
Carriage mounting: By T-nuts and bores through the cover.
Unit mounting: By T-nuts and bores through the cover.
Belt performance: HTD with kevlar reinforcement, no backlash when changing direction, repeatability ± 0,1 mm.
Carriage support: In the standard version, the carriage runs on 4 rollers which can be adjusted and serviced at a central servicing position. For longer carriages the number of rollers can be increased.

Forces and torques

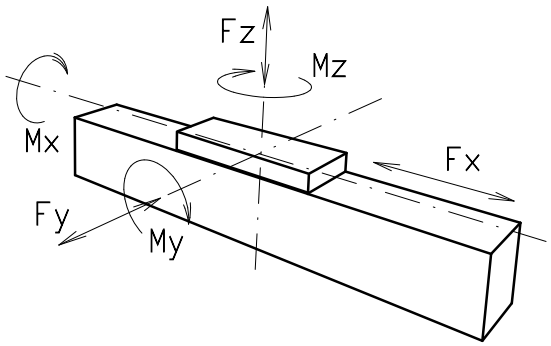

Size	60		80		100	
Forces/Torques	static	dynamic	static	dynamic	static	dynamic
F_x (N)	894	800	1900	1800	4000	3800
F_y (N)	399	333	1065	825	1267	1000
F_z (N)	599	433	999	799	1400	1133
M_x (Nm)	10	7	33	26	128	40
M_y (Nm)	40	33	66	53	93	73
M_z (Nm)	26	20	50	40	73	60
All forces and torques related to the following: existing values / table values $\frac{Fy}{Fy_{dyn}} + \frac{Fz}{Fz_{dyn}} + \frac{Mx}{Mx_{dyn}} + \frac{My}{My_{dyn}} + \frac{Mz}{Mz_{dyn}} \leq 1$						
No-load torque						
Nm	0,8		1,0		1,5	
Speed						
(m/sec) max	4		6		7	
Tensile force						
permanent (N)	900		1900		4000	
0,2 sec (N)	1000		2090		4300	
Geometrical moments of inertia of aluminium profile						
I_x mm^4	$4{,}3 \times 10^5$		$16{,}5 \times 10^5$		$43{,}0 \times 10^5$	
I_y mm^4	$4{,}8 \times 10^5$		$18{,}7 \times 10^5$		$48{,}8 \times 10^5$	
Elastic modulus N/mm^2	70000		70000		70000	

11.1

Formula: QLZE
Driving torque:

$$M_a = \frac{F*P*S_i}{2000*\pi} + M_{leer}$$

$$P_a = \frac{M_a*n}{9550}$$

F	= force	(N)
P	= pulley action perimeter	(mm)
S_i	= safety factor 1,2 ... 2	
M_{leer}	= no-load torque	(Nm)
n	= rpm pulley	(min^{-1})
M_a	= driving torque	(Nm)
P_a	= motor power	(KW)

$$f = \frac{F*L^3}{E*I*192}$$

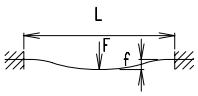

f= deflection	(mm)
F = load	(N)
L= free length	(mm)
E= elastic modulus 70000	(N/mm^2)
I= second moment of area	(mm^4)

Modular Linear Actuator
QLZE 60, 80, 100

Dimensions (mm)

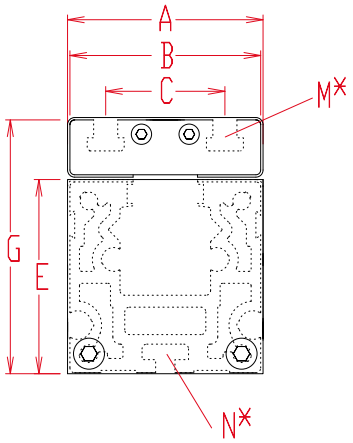

Increasing the carriage length will increase the basic length by the same amount.

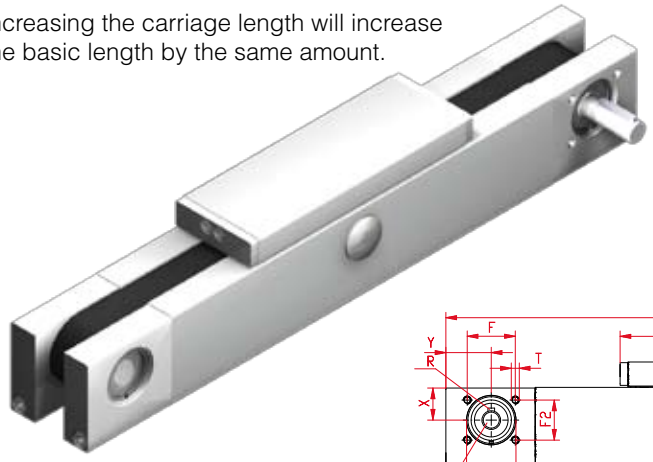

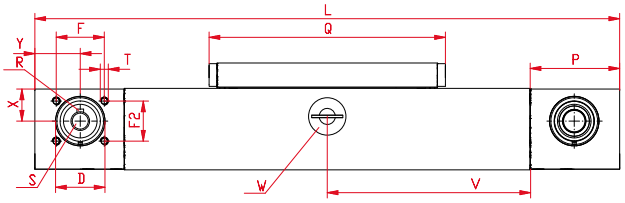

*For slide nuts refer to the accessory section V = Q + 100 mm W = servicing position

Size	Basic length L	A	B	C	D	E	F/F2	G	N for	M for	P	Q	T	X	Y	Basic weight	Weight per 100 mm
QLZE 60	296	61	60	36	37	61	36/30	80	M 5	M 6	67	152	M 6	24,5	34	4,2 Kg	0,40 kg
QLZE 80	400	81	80	50	55	81	50/50	107	M 6	M 8	95	196	M 8	32,5	47	10,6 Kg	0,80 Kg
QLZE 100	484	101	100	66	62	101	62/58	130	M 10	M 10	107	260	M 10	40	54		

Choice of guide body profile:

0 **(0)** Standard **(1)** stainless guide rods **(2)** stainless guide rods and screws **(3)** stainless guide rods, rollers and screws

Choice of carriages:

0

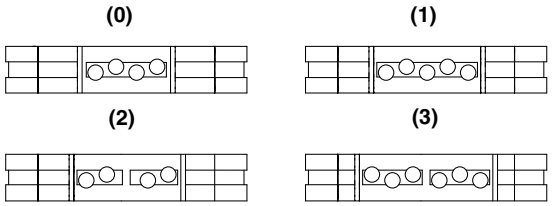

Size	Version 0		Version 1		Version 2		Version 3	
	Q	L	Q	L	Q	L	Q	L
60	152	296	192	336	232	376	232	376
80	196	400	246	450	296	500	296	500
100	260	484	320	544	388	604	388	604

Selection of shaft mounting:

2

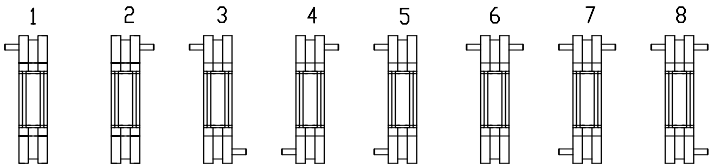

The standard version is supplied shaft pos. 2

Size	Shaft	
	R Key	S ø h6 x length
60	5x5x28	14 x 35
80	6x6x40	18 x 45
100	6x6x40	22 x 45

Belt table

Code No.		Size	Belt	Pulley	
				mm/rev.	Number of teeth
0	3	60	5M25	130	26
0	4	80	8M30	176	22
0	7	100	8M50	224	28

Basic Length + Stroke + Overtravel** = total length
**Minimum 25mm on each end

For additional accessories refer to the accessory section

QLZE	80	1	0	0	2	0	4	1	01500
	Pos.	1	2	3	4	5	6	7	

Sample ordering code:
QLZE80, standard body profile, standard carriage, shaft pos.2, 1100 mm stroke

11.1

Modular Linear Actuator
QSZE 60, 80, 100

Belt Drive **Specifications**

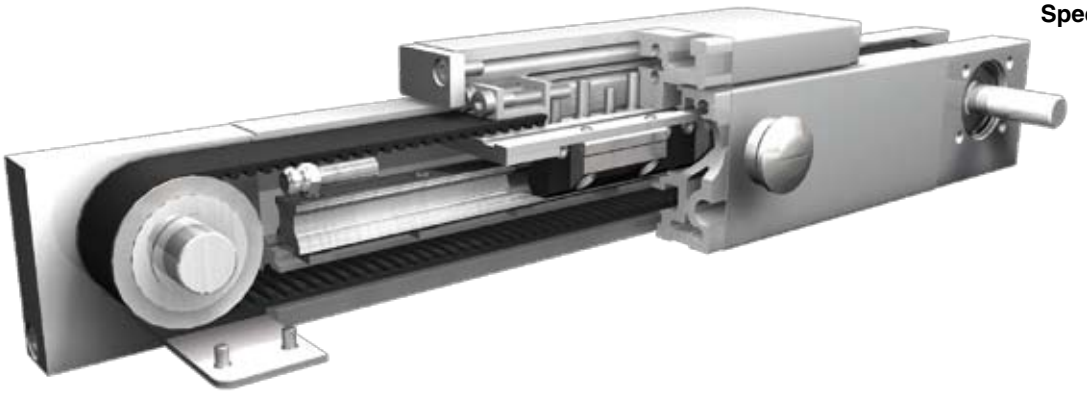

Function:
This unit consists of a square aluminium profile with an integrated ball rail guide and is covered by a stainless steel sheet (thickness 0.37mm, material 1.4301). The carriage is moved by a belt drive. Belt tension can be readjusted by a simple screw adjustment device in the carriage. This device can also be used for symmetrical adjustment of two or more linear units running parallel.

Fitting position: As required. Max. length 3.000 mm without joints.
Carriage mounting: By T-nuts and bores through the cover.
Unit mounting: By T-nuts and bores through the cover.
Belt performance: HTD with kevlar reinforcement, no backlash when changing direction, repeatability ± 0,1 mm.
Carriage support: In the standard version, the carriage runs on two runner blocks which can be adjusted and serviced at a central servicing position. For longer carriages the number of runner blocks can be increased.

Forces and torques

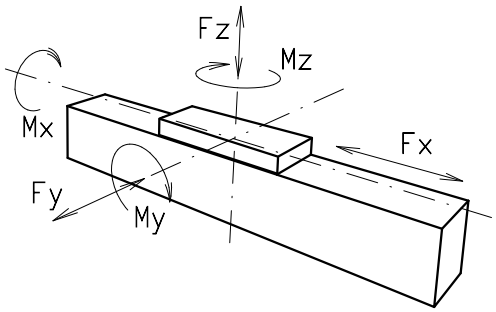

Size	60		80		100	
permitted dyn. Forces*	5000 km	10000 km	5000 km	10000 km	5000 km	10000 km
F_x (N)	894	800	1900	1800	4000	3800
F_y (N)	1410	990	3570	2550	4080	2900
F_z (N)	3520	2500	8500	6050	10300	7270
M_x (Nm)	33	23	107	75	142	101
M_y (Nm)	104	73	310	222	439	311
M_z (Nm)	100	70	296	210	412	292
C (N)	7800		18800		22800	

All forces and torques related to the following:

existing values / table values

$$\frac{Fy}{Fy_{dyn}} + \frac{Fz}{Fz_{dyn}} + \frac{Mx}{Mx_{dyn}} + \frac{My}{My_{dyn}} + \frac{Mz}{Mz_{dyn}} \leq 1$$

No-load torque			
Nm	1,0	1,4	1,8
Speed			
(m/sec) max	5	5	5
Tensile force			
permanent (N)	900	1900	4000
0,2 sec (N)	1000	2090	4300
Geometrical moments of inertia of aluminium profile			
I_x mm^4	$4{,}3 \times 10^5$	$16{,}5 \times 10^5$	$43{,}0 \times 10^5$
I_y mm^4	$4{,}8 \times 10^5$	$18{,}7 \times 10^5$	$48{,}8 \times 10^5$
Elastic modulus N/mm^2	70000	70000	70000

* referred to life-time

11.1

Formula: QSZE
Driving torque:

$$M_a = \frac{F*P*S_i}{2000*\pi} + M_{leer}$$

$$P_a = \frac{M_a*n}{9550}$$

F = force (N)
P = pulley action perimeter (mm)
S_i = safety factor 1,2 ... 2
M_{leer} = no-load torque (Nm)
n = rpm pulley (min^{-1})
M_a = driving torque (Nm)
P_a = motor power (KW)

Deflection:

$$f = \frac{F*L^3}{E*I*192}$$

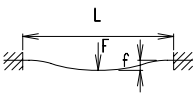

f = deflection (mm)
F = load (N)
L = free length (mm)
E = elastic modulus 70000 (N/mm^2)
I = second moment of area (mm^4)

Nominal lifetime:

$$L = \left(\frac{C}{F}\right)^3 x10^5$$

L = Lifetime in meter
C = Dynamic load factor (N)
F = Middle load (N)

nookindustries.com toll-free 1 (800) 321-7800
www.nookindustries.ru (499) 703 35 98 sell@nookindustries.ru

Modular Linear Actuator
QSZE 60, 80, 100

Dimensions (mm)

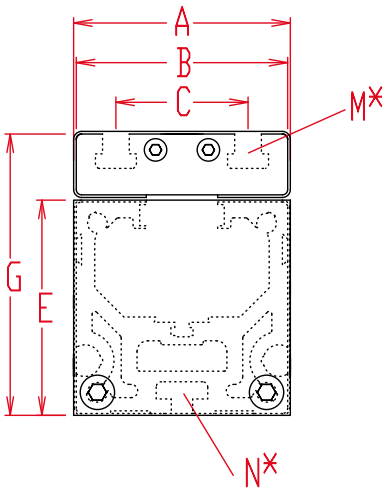

Increasing the carriage length will increase the basic length by the same amount.

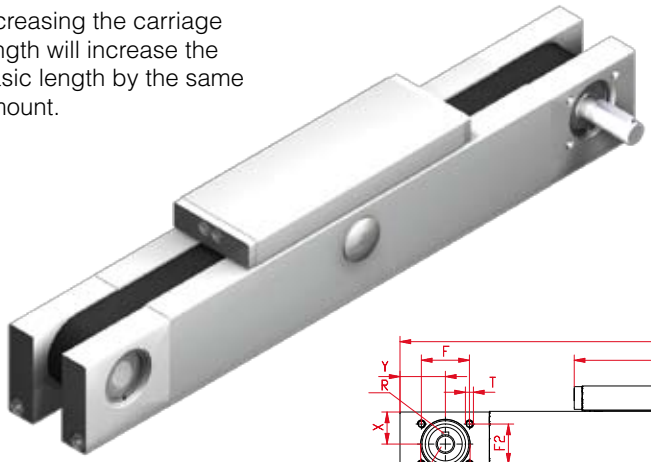

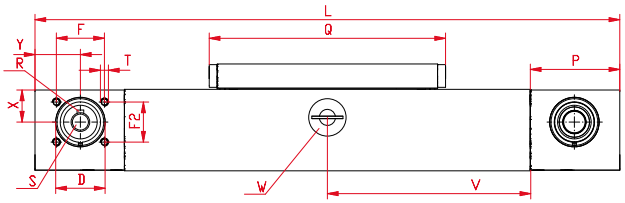

*For slide nuts refer to the accessory section V = Q + 100 mm W = servicing position

Size	Basic length L	A	B	C	D	E	F/F2	G	N for	M for	P	Q	T	X	Y	Basic weight	Weight per 100 mm
QSZE 60	316	61	60	36	37	61	36/30	80	M 5	M 6	67	177	M 6	24,5	34	4,2 Kg	0,40 kg
QSZE 80	440	81	80	50	55	81	50/50	107	M 6	M 8	95	232	M 8	32,5	47	10,6 Kg	0,80 Kg
QSZE 100	504	101	100	66	62	101	62/58	130	M 10	M 10	107	268	M 10	40	54		

Choice of guide body profile:

0 **(0)** Standard

Choice of carriages:

0

Size	Version 0		Version 1	
	Q	L	Q	L
60	177	316	152	296
80	232	440	196	400
100	268	504	260	494

Selection of shaft mounting:

2

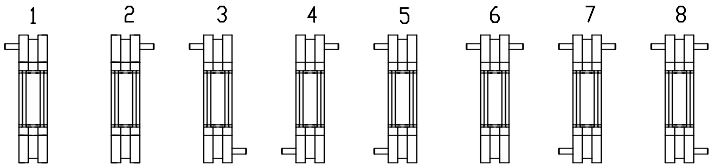

The standard version is supplied shaft pos. 2

Size	Shaft	
	R Key	S ø h6 x length
60	5x5x28	14 x 35
80	6x6x40	18 x 45
100	6x6x40	22 x 45

Belt table

Code No.		Size	Belt	Pulley	
				mm/rev.	Number of teeth
0	3	60	5M25	130	26
0	4	80	8M30	176	22
0	7	100	8M50	224	28

Basic Length + Stroke + Overtravel** = total length
**Minimum 25mm on each end

For additional accessories refer to the accessory section

QSZE	80	1	0	0	2	0	4	1	01500
	Pos.	1	2	3	4	5	6	7	

Sample ordering code:
QSZE80, standard body profile, standard carriage, shaft pos2, 1060 mm stroke

11.1

Modular Linear Actuator
QST/KE 60, 80, 100

Screw Drives **Specifications**

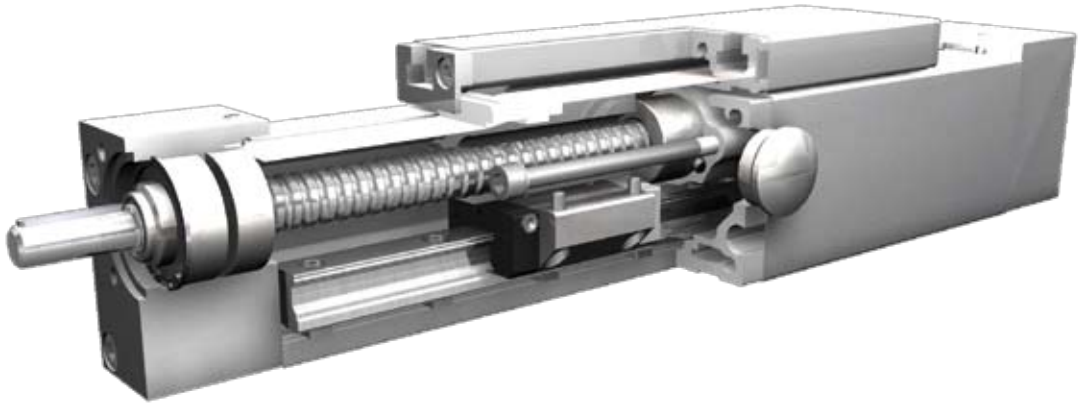

Function:
This unit consists of a square aluminium profile with an integrated ball rail and is covered by a stainless steel sheet (thickness 0.37mm, material 1.4301). The carriage is driven by means of a rotating screw with leading nut. The openings of the guide body are sealed by a stainless steel cover band to protect the drive from splash water and dust.

Fitting position: As required, max. length 3000mm
Carriage connection: By T-nuts and bores through the cover.
Unit mounting: By the bearing blocks

Forces and torques

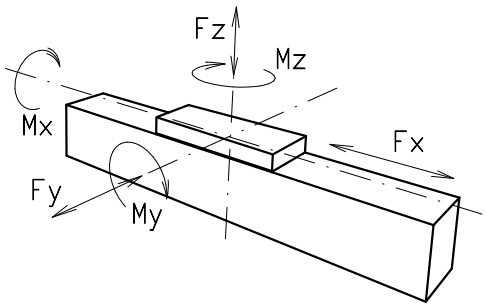

Size	QST/KE 60		QST/KE 80		QST/KE 100	
permitted dyn. Forces*	5000 km	10000 km	5000 km	10000 km	5000 km	10000 km
F_x (N)	900	800	2500	2000	5000	4000
F_y (N)	1415	1010	3570	2542	4082	2910
F_z (N)	3525	2510	8500	6050	10300	7360
M_x (Nm)	33	23	107	76	142	101
M_y (Nm)	190	143	604	430	838	597
M_z (Nm)	176	125	550	392	745	532

All forces and torques related to the following:

existing values / table values: $\frac{Fy}{Fy_{dyn}} + \frac{Fz}{Fz_{dyn}} + \frac{Mx}{Mx_{dyn}} + \frac{My}{My_{dyn}} + \frac{Mz}{Mz_{dyn}} \leq 1$

No-load torque			
Acme	18x4/18x8	24x5/24x10	32x6/32x12
Nm	0,6/0,7	0,6/0,8	1,5/1,7
Ballscrew	16x5/16x10	25x5/20x20/25x10	32x5/32x10
Nm	0,4/0,6	0,4/0,7/0,6	1,3/1,6
Geometrical moments of inertia of aluminium profile			
I_x mm^4	4,3x10^5	14,0x10^5	43,0x10^5
I_y mm^4	4,8x10^5	16,6x10^5	48,8x10^5
E-Modulus N/mm^2	70000	70000	70000

* referred to life-time

11.1

Formula: QST/KE

Driving torque:

$$M_a = \frac{F*P*S_i}{2000*\pi*\mu} + M_{leer}$$

$$P_a = \frac{M_a*n}{9550}$$

F	= force	(N)
P	= thread pitch	(mm)
S_i	= safety factor 1,2 ... 2	
M_{leer}	= no-load torque	(Nm)
n	= rpm of screw	(min^{-1})
M_a	= driving torque	(Nm)
μ	= screw efficiency	
P_a	= motor power	(KW)

Efficiency of lead screws:

All ballscrew 0.900

Tr 18x4	0,399
Tr 18x8	0,565
Tr 24x5	0,384
Tr 24x10	0,550
Tr 32x6	0,360
Tr 32x12	0,524

$$f = \frac{F*L^3}{E*I*192}$$

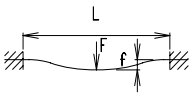

f	= deflection	(mm)
F	= load	(N)
L	= free length	(mm)
E	= elastic modulus 70000	(N/mm^2)
I	= second moment of area	(mm^4)

Modular Linear Actuator
QST/KE 60, 80, 100

Dimensions (mm)

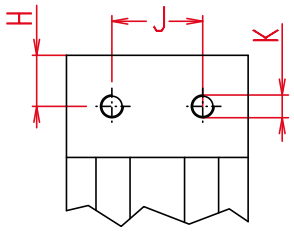

Increasing the carriage length will increase the basic length by the same amount.

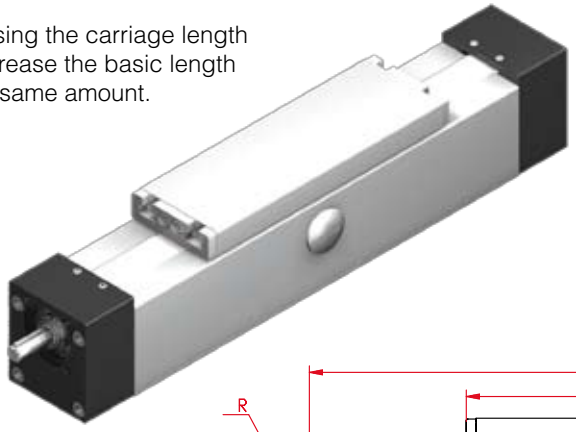

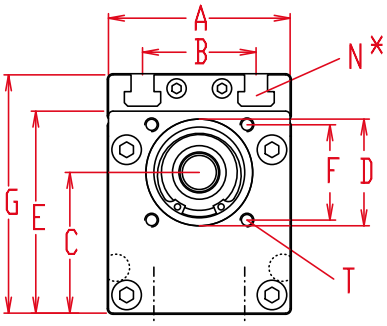

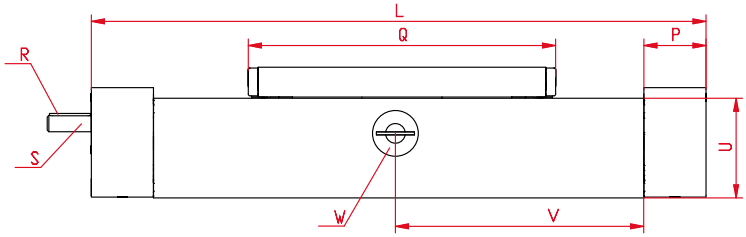

*For slide nuts refer to the accessory section V = Q + 100 mm W = servicing position

Size	Basic length L	A	B	C	D	E	F ⊠	G	H	J	K for	N for	P	Q	Shaft R Key	Shaft S Øh6 x length	T for	U	Basic weight	Weight per 100 mm
QST/KE 60	270	61	36	45,5	37	67,5	32	80	19	18	M6	M6	38	188	3x3x25	10h6x27	M5	61	4,1 kg	0,5 kg
QST/KE 80	350	81	50	62,5	47	89,5	42	107	22,5	40	M10	M8	45	250	5x5x28	14h6x35	M6	81	7,5 kg	0,9 kg
QST/KE 100	410	101	66	75,5	68	112,5	60	130	28,5	50	M10	M10	57	288	6x6x40	22h6x45	M8	101	14,8 kg	1,3 kg

K **Spindle:**
(T) Acme thread **(K)** Ballscrew

1 **Selection of screw:**
(1) right hand (Standard) **(2)** left hand (Ballscrew by inquiry)

Choice of carriage

0

Size	Carriage version 1 Q	Carriage version 1 Basic length L
60	255	350
80	336	436
100	383	510

0 **Choice of journal:**
(0) one shaft (locating bearing side) **(1)** one shaft (non-locating bearing side) **(2)** shaft on both sides

0 **Selection of screw:**

Size	Standard	Multistart screw	Standard	Multistart screw	
	acme thread		ballscrew		
60	**(0)** Tr 18x4	**(1)** Tr 18x8	**(0)** Kg 16x5	**(1)** Kg 16x10	**(2)** Kg 16x16
80	**(0)** Tr 24x5	**(1)** Tr 24x10	**(0)** Kg 25x5	**(1)** Kg 20x20	**(2)** Kg 25x10
100	**(0)** Tr 32x6	**(1)** Tr 32x12	**(0)** Kg 32x5	**(1)** Kg 32x10	**(2)** Kg 32x32 *

* Basic and carriage length (L and Q) increase by 47 mm

0 **Ballscrew pitch accuracy:**
(0) 0,1 mm / 300 mm (Standard) **(1)** 0,05 mm / 300 mm **(2)** 0,025 mm / 300 mm

0 **End play of ball nut:**
(0) 0,04 mm (Standard) **(1)*** < 0,02 mm **(2)*** 2% apply prestress
* only in combination with **pitch accuracy (1)** or **(2)**

1500 Basic Length + Stroke + Overtravel** = total length
**Minimum 25mm on each end

QS	K	E	80	1	0	0	0	0	0	0	01500
			Pos.	1	2	3	4	5	6	7	

Sample ordering code:
QSKE80, ballscrew right hand thread, standard carriage, one shaft (locating bearing side), spindle 25x5, 1150 mm stroke.

Modular Linear Actuator ELBZ R800

Function:
This linear unit consists of a curved aluminium square profile with hardened steel guide rods. The smallest radius amounts to 800 mm. The carriage which has internal linear ball bearings that can be adjusted free of play is driven along the guide rods by a timing belt. The pulley has maintenance-free ball bearings. Belt tension can be readjusted by a simple tensioning device in one of the end blocks. This device can also be used for symmetrical adjustment of two or more linear units running parallel.

Fitting position:	As required.
Carriage mounting:	Drilled and Topped holes
Unit mounting:	By T-slots or tapped holes in the profile nut, or mounting sets.
Belt type:	HTD with steel reinforcement, no backlash when changing direction, repeatability ± 0,1 mm.

Formula: ELBZ
Driving torque:

$$M_a = \frac{F*P*S_i}{2000*\pi} + M_{leer}$$

$$P_a = \frac{M_a*n}{9550}$$

F = force	(N)
P = pulley action perimeter	(mm)
S_i= safety factor 1,2 ... 2	
M_{leer} = no-load torque	(Nm)
n = rpm pulley	(min^{-1})
M_a= driving torque	(Nm)
P_a= motor power	(KW)

$$f = \frac{F*L^3}{E*I*192}$$

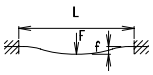

f= deflection	(mm)
F= load	(N)
L= free length	(mm)
E= elastic modulus 70000	(N/mm^2)
I= second moment of area	(mm^4)

nookindustries.com toll-free 1 (800) 321-7800
www.nookindustries.ru (499) 703 35 98 sell@nookindustries.ru

Modular Linear Actuator
ELBZ R800

Dimensions (mm)

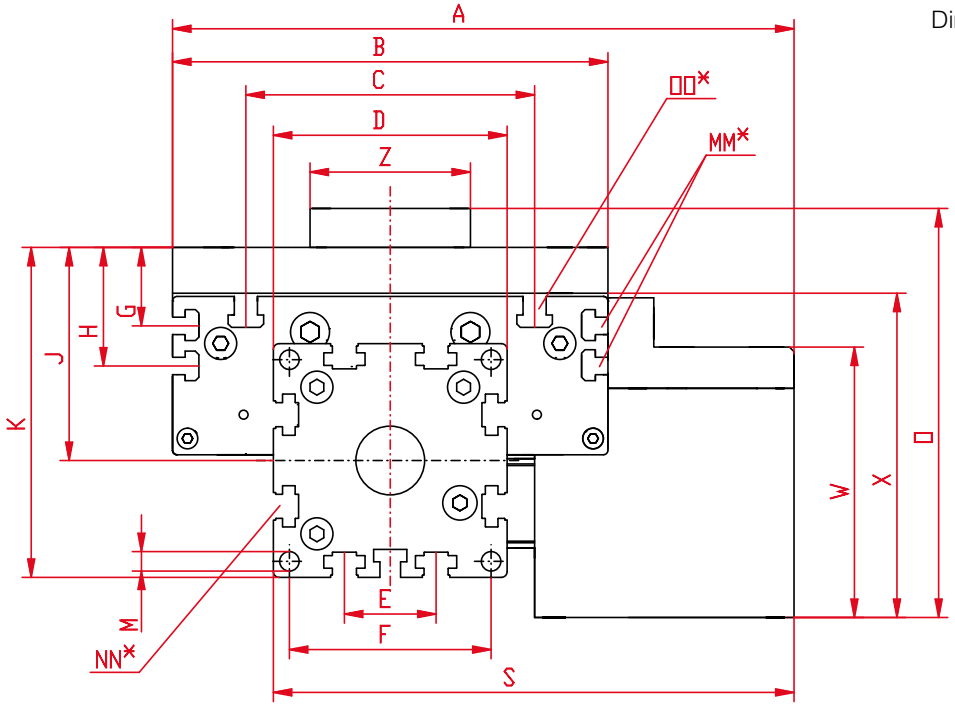

*For slide nuts refer to the accessory section V = Q + 100 mm W = servicing position

Size	A	B	C	D	E	F	G	H	J	K	M	O	S	MM for	NN for	OO for	W	X	Z
80S	271	190	126	102	40	88	34,5	52	94	145	8,5	183	228	M6	M10	M10	118	137,5	74

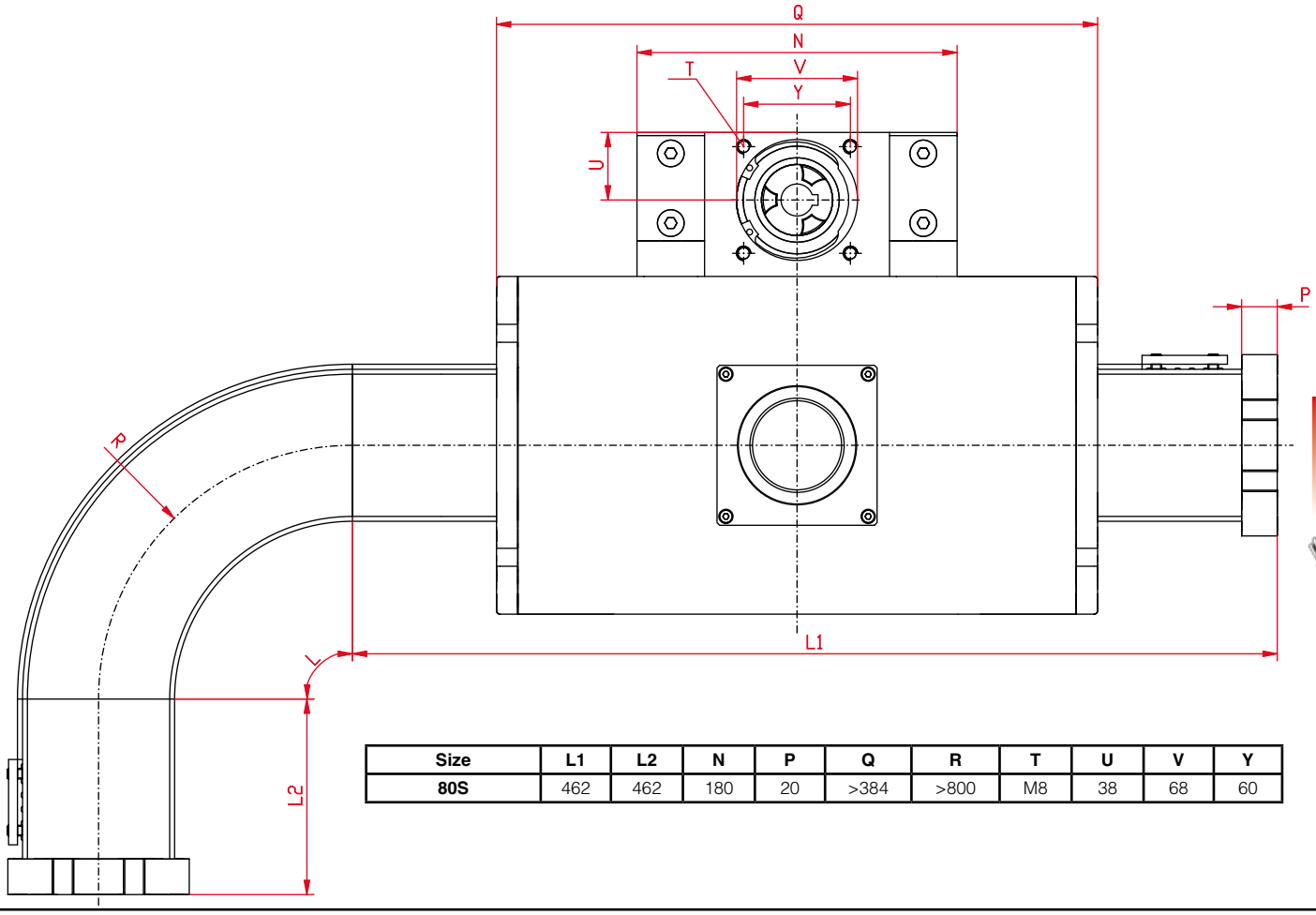

Size	L1	L2	N	P	Q	R	T	U	V	Y
80S	462	462	180	20	>384	>800	M8	38	68	60

Modular Linear Actuators
QLZE and QSKE-Lift

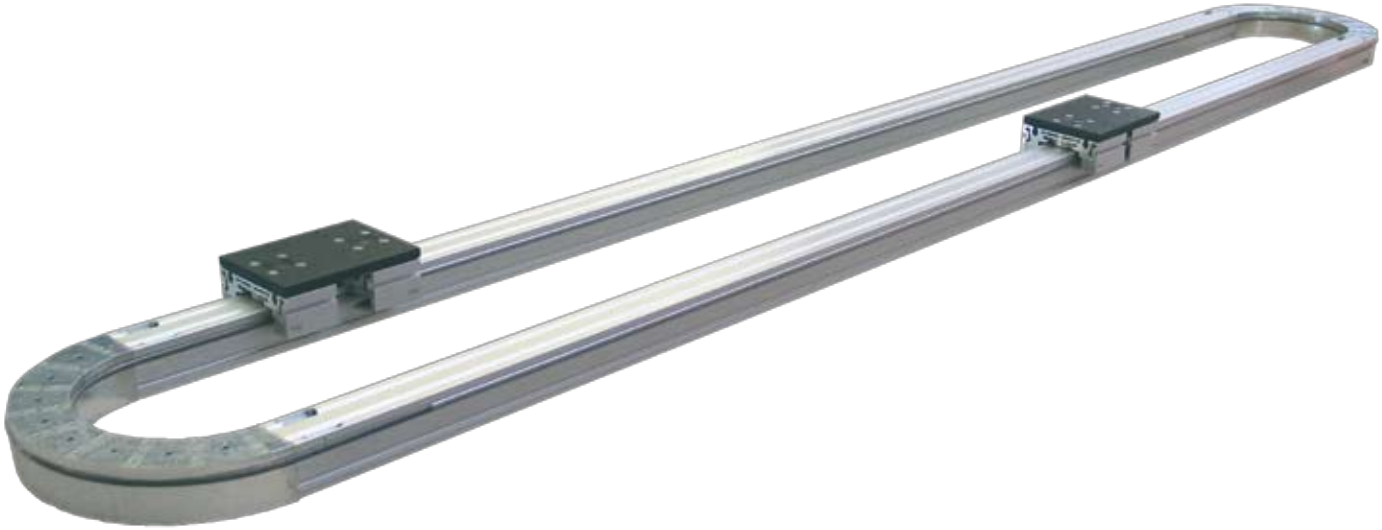

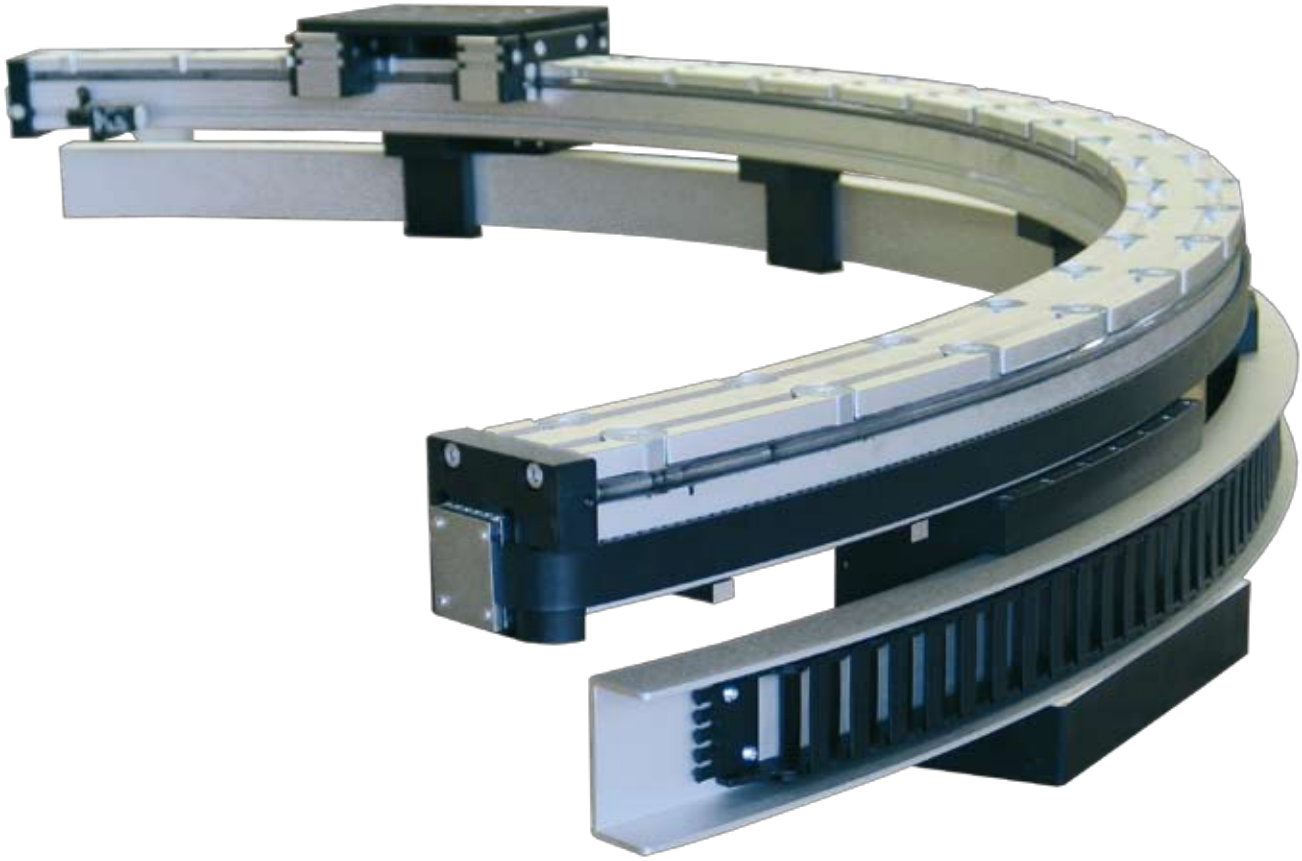

Combination of Different Systems

Spare Parts

Spare Parts

Complete carriage EG

Additional complete carriage with V-slides and end plates. **Carriage**

Code-No.	Type	Q Standard	Q min.	Q max.
04532	**EG 30**	82	50	1000
04542	**EG 40**	118	80	1000
04562	**EG 60**	164	125	1000
04582	**EG 80**	193	150	1000

Complete carriage EL/ML

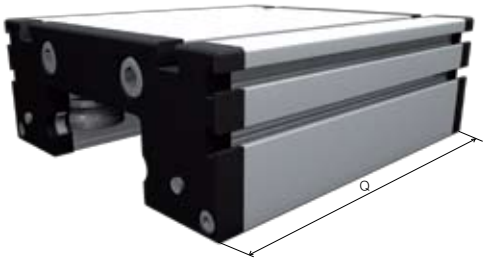

1) ELT/K, ELVZ, ELHZ
2) ELZ, ELZT, ELZU, ELZA, ELZQ, MLZ

Additional complete carriage with rollers, eccentrics and wiper end plates for free rolling.
Temperature: Up to 100° C.

	Code-No.	Type	Q Standard	Q min.	Q max.
without Slider (2)	**04531**	**EL 30**	82	50	3000
	04541	**EL 40**	122	80	3000
	04561	**EL/ML 60**	168	125	3000
	04560	**EL/ML 60S**	194	125	3000
	04581	**EL/ML 80**	194	150	3000
	04580	**EL/ML 80S**	214	190	3000
	04511	**EL/ML 100**	300	200	2000
	04521	**EL 125**	365	250	2000

	Code-No.	Type	Q Standard	Q min.	Q max.
with Slider (1)	**045311**	**EL 30**	82	50	3000
	045411	**EL 40**	122	80	3000
	045611	**EL 60**	168	125	3000
	045601	**EL 60S**	194	125	3000
	045811	**EL 80**	194	150	3000
	045801	**EL 80S**	214	190	3000
	045111	**EL 100**	300	200	2000
	045211	**EL 125**	365	250	2000

Complete carriage UL

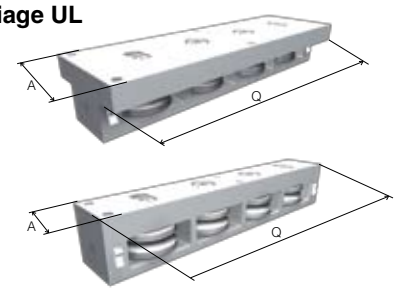

Carriage with rollers, eccentrics and end plates.
Temperature: Up to 100° C.

Code-No.	Type	A	Q
045471	**UL 40**	40	146
045472	**UL 40**	20	146
045671	**UL 60**	60	194
045672	**UL 60**	29	194
045871	**UL 80**	80	260
045872	**UL 80**	42	260

Complete carriage DL

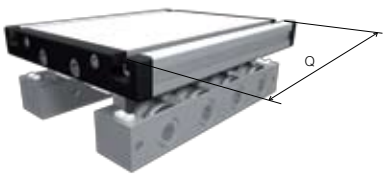

Standardcarriage with 2x4 rollers, eccentrics and end plates.
Temperature: Up to 100° C.
Different versions by inquiry.

Code-No.	Type	Q Standard	Q max.
04591	**DL 120**	156	3000
04590	**DL 160**	200	3000
04592	**DL 200**	270	3000

Complete carriage DS

Carriage with four runner blocks and end plates.
Temperature: Up to 100° C.
Different versions by inquiry.

Code-No.	Type	Q Standard	Q max.
045700	**DS 120**	156	3000
045710	**DS 160**	200	3000
045720	**DS 200**	270	3000

nookindustries.com toll-free 1 (800) 321-7800
www.nookindustries.ru (499) 703 35 98 sell@nookindustries.ru

Carriage QL

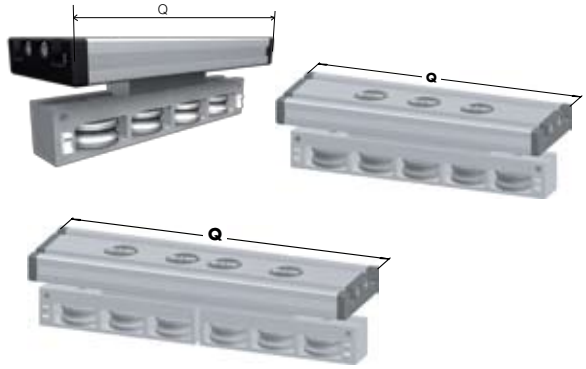

Carriage with rollers, eccentrics and end plates.
Temperature: Up to 100° C.
Different versions by inquiry.

Code-No.	Type	Q Standard	Number of rollers
04593A	QL 60	152	4
04593B	QL 60	192	5
04593C	QL 60	232	6
04594A	QL 80	196	4
04594B	QL 80	246	5
04594C	QL 80	296	6
04595A	QL 100	260	4
04595B	QL 100	320	5
04595C	QL 100	388	6

Carriage QS

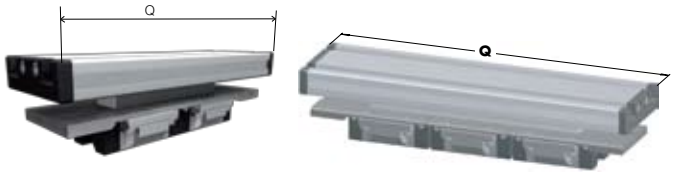

Carriage with 2 runner blocks and end plates.
Temperature: Up to 100° C.
Different versions by inquiry.

Code-No.	Type	Q Standard	Number of Runnerblocks
04597A	QS 60	177	2
04597B	QS 60	177	3
04598A	QS 80	232	2
04598B	QS 80	232	3
04599A	QS 100	268	2
04599B	QS 100	268	3

Carriage QST/K

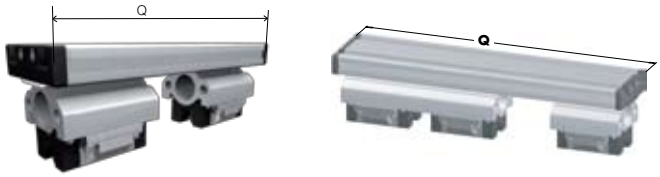

Carriage with 2 runner blocks and end plates without leading nut.
Temperature: Up to 100° C.
Different versions by inquiry.

Code-No.	Type	Q Standard	Q max.
045974	QST/K 60	188	3000
045984	QST/K 80	250	3000
045997	QST/K 100	188	3000

V-slide EG

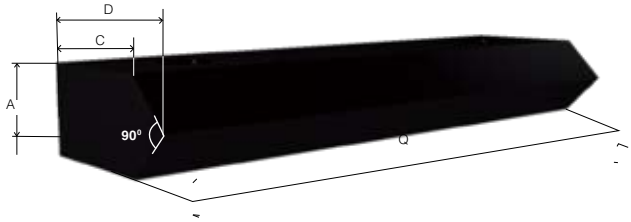

Made of low-wear plastic with good sliding characteristics.
2 pieces per carriage.

Code-No.	Type	A	B max.	C	D
04233	30	9,3	1.000	-	17,6
04243	40	8	1.000	9	13
04263	60	10	1.000	16	21
04283	80	14	1.000	22	29

Carriage roller

Standard roller.
Stainless steel upon request

Code-No.	Type
04000	EL 30
04001	EL 40 / DL 120 / QL 60
04002	EL/ML 60 / DL 160 / QL 80
04039	EL/ML 60S / DL 200 / QL 100
04003	EL/ML 80
04038	EL/ML 80S
04004	EL/ML 100
04009	EL 125

Carriage Roller Block DL - QL

DL

QL

Made of aluminium, complete with rollers, eccentric and screws. **Carriage**

Code-No.	Type	Standard	By inqury
04100	DL 120	4 rollers	3; 5; 2x3 rollers
04110	DL 160	4 rollers	3; 5; 2x3 rollers
04115	DL 200	4 rollers	3; 5; 2x3 rollers
04116	QL 60	4 rollers	5; 2x2; 2x3 rollers
04117	QL 80	4 rollers	5; 2x2; 2x3 rollers
04119	QL 100	4 rollers	5; 2x2; 2x3 rollers

* for outside fixed roller
** for inner movable roller

Runner block for DS - QS

DS

QS

Code-No.	Type
04150	QS 60
04152	QS 80
04154	QS 100
04157	DS 160
04158	DS 200

Eccentric EL/ML

Size 40, 60

Size 30, 60S, 80, 80S, 100, 125

Eccentric made of stainless steel with mounting accessories (Screw, spring washer).

Code-No.	Type
04050	EL 30
04051	EL 40
04052	EL/ML 60
04048	EL/ML 60S
04053	EL/ML 80
04049	EL/ML 80S
04054	EL 100
04055	EL 125

Eccentric DL - QL

DL

QL*

QL**

Eccentric made of stainless steel with mounting set, screw and locking rings. The front side has an embossed marking to enable uniformly adjustment of rollers.

Code-No.	Type
04057	DL 120
04058	DL 160
04059	DL 200
06060	QL 60*
06061	QL 60**
06080	QL 80*
06081	QL 80**
06010	QL 100*
06011	QL 100**

* for outside fixed roller
** for inner movable roller
For arrangement of the different rollers see „carriage roller block“ above.

Tool For Eccentric Adjustment

Fix tool			Adjust tool	
Type	Code-No.	Dimension	Code-No.	Dimension
EL 30	09020	SW 2	09030	LK 9,5 ø 1,5
EL 40	09021	SW 4	09022	SW 5
EL 60	09022	SW 5	09023	SW 6
EL 60S	09023	SW 6	09036	LK 20 ø 2
EL 80	09022	SW 5	09031	LK 15 ø 2
EL 80S	09023	SW 6	09036	LK 20 ø 2
EL 100	09023	SW 6	09032	LK 24 ø 4
EL 125	09024	SW 8	09033	LK 32 ø5

Carriage

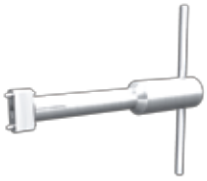

Fix tool			Adjust tool	
Type	Code-No.	Dimension	Code-No.	Dimension
DL 120	09025	SW 3	09034	LK 10,5 ø 1
DL 160	09021	SW 4	09031	LK 15 ø 2
DL 200	09023	SW 6	09036	LK 20 ø 2
QL 60	09038	LK 8 ø 2	09026	SW 2,5
	09021	SW 4	09022	SW 5
QL 80	09037	LK 10 ø 2	09025	SW 3
	09022	SW 5	09023	SW 6
QL 100	09035	LK 13 ø 3	09021	SW 4
	09023	SW 6	09036	LK 20 ø 2

End plates EG

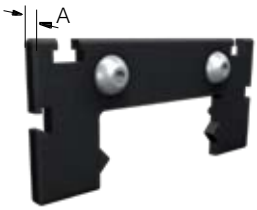

Material ABS, for temperatures up to 100°C

Code-No.	Type	A
04241	EG 40	5
04261	EG 60	6
04281	EG 80	6

Wiper end plate complete for EL/ML

Material ABS, for temperatures up to 100°C

without slider (2)		
Code-No.	Type	A
04230	EL 30	6
04240	EL 40	11
04260	EL/ML 60	12
04268	EL/ML 60S	12
04280	EL/ML 80	12
04288	EL/ML 80S	12
04210	EL/ML 100	15
04220	EL 125	15

with slider (1)		
Code-No.	Type	A
04234	EL 30	6
04244	EL 40	11
04264	EL 60	12
04269	EL 60S	12
04284	EL 80	12
04289	EL 80S	12
04214	EL100	15
04224	EL125	15

1) ELT/K, ELVZ, ELHZ
2) ELZ, ELZT, ELZU, ELZA, ELZQ, MLZ

Slider inset for ELT / ELK
Slider inset for DLT / DLK

When changing the cover band, it is necessary to replace the slider inset

ELT / ELK	
Code-No.	Type
03132	EL 30
03142	EL 40
03162	EL 60

DLT / DLK	
Code-No.	Type
03164	DL 120
03184	DL 160
03114	DL 200

Wiper end plate DL /DS - QL / QS

DL / DS

QL / QS

Code-No.	Type	D	Material
04211	DL 120	8	ABS
04212	DL/DS 160	10	ABS
04213	DL 200	15	ABS
04267	QL/QS 60	6	ABS
04287	QL/QS 80	8	ABS
04217	QL/QS 100	10	ABS

Spare Parts

Cover band

EL / EG DL / DS

Spring steel (stainless steel)

Guide Body Profile

Code-No.	Type	A x B
01020....	EL/EG 30	8 x 0,15
01021....	EL/EG 40/60/80 DL/DS 120	13,5 x 0,3
01026....	DL/DS 160	17,3 x 0,3
01022....	EL 100/125 DL/DS 200	22 x 0,3
01023	QST/K 60	24 x 0,3
01024	QST/K 80	32,3 x 0,3
01025	QST/K 100	38,5 x 0,3

Code-No.	length in mm
01026	2300

Sample ordering code:
Cover band 17,3 x 0,3 2.300 mm long.
Aluminium plate with connection bores.

Jointing plate for closed carriage

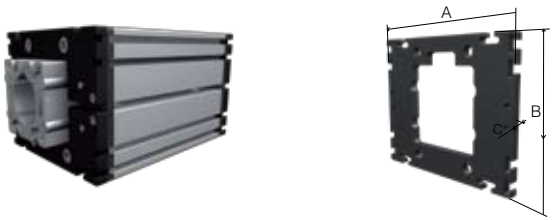

Code-No.	Type	A	B	C
03045	EG 40	70	70	8
03065	EG 60	100	98	8
03085	EG 80	140	140	8
03036	EL 30	70	52	6
03046	EL 40	100	70	8
03066	EL/ML 60	144	98	8
03067	EL/ML 60S	170	106	10
03086	EL/ML 80	170	140	8
03087	EL/ML 80S	190	142	10
03016	EL 100	230	180	8
03026	EL 125	295	215	12

Guide rod

Code-No.	Type	Ø	Material	Hardness
04131....	EL/EG 30	5 h6	Cf 53	HRC 62
04132....	EL/EG 30	5 h6	x 90 CrMoV18	HRC 56
04141....	EL 40 DL 120 QL 60	6 h6	Cf 53	HRC 62
04142....	EL 40 DL 120 QL 60	6 h6	x 90 CrMoV18	HRC 56
04161....	EL 60(S) DL 160/200 QL 80/100	10 h6	Cf 53	HRC 62
04162....	EL 60(S) DL 160/200 QL 80/100	10 h6	x 90 CrMoV18	HRC 56
04181....	EL 80(S)	12 h6	Cf 53	HRC 62
04182....	EL 80(S)	12 h6	x 90 CrMoV18	HRC 56
04111....	EL 100	16 h6	Cf 53	HRC 62
04112....	EL 100	16 h6	x 90 CrMoV18	HRC 56
04113....	EL 125	20 h6	Cf 53	HRC 62
04114....	EL 125	20 h6	x 90 CrMoV18	HRC 56

Code-No.	length in mm
04131	2000

Sample ordering code:
Guiding rod steel ø 5 2.000 mm long.

nookindustries.com toll-free 1 (800) 321-7800
www.nookindustries.ru (499) 703 35 98 sell@nookindustries.ru

Acme Screw

Spindle

Code-No.	Type	Pitch	Unit length L max.
04609....	EL/EG 30	10x03 R	1.500 mm
04629....	EL/EG 30	10x03 L	1.500 mm
04600....	EL/EG 40	18x04 R	3.000 mm
04620....	EL/EG 40	18x04 L	3.000 mm
04640....	DL 120 / QS 60	18x04 R	3.000 mm
04650....	DL 120 / QS 60	18x04 L	3.000 mm
04601....	EL/EG 40	18x08 R	3.000 mm
04621....	EL/EG 40	18x08 L	3.000 mm
04641....	DL 120 / QS 60	18x08 R	3.000 mm
04651....	DL 120 / QS 60	18x08 L	3.000 mm
04602....	EL/EG 60	24x05 R	4.000 mm
04622....	EL/EG 60	24x05 L	3.000 mm
04642....	DL/DS 160 QS 80	24x05 R	4.000 mm
04652....	DL/DS 160 QS 80	24x05 L	3.000 mm
04603....	EL/EG 60	24x10 R	3.000 mm

Code-No.	Type	Pitch	Unit length L max.
04623....	EL/EG 60	24x10 L	3.000 mm
04643....	DL/DS 160 / QS 80	24x10 R	3.000 mm
04643....	DL/DS 160 / QS 80	24x10 L	3.000 mm
04604....	EL/EG 80(S)	28x05 R	3.000 mm
04624....	EL/EG 80(S)	28x05 L	3.000 mm
04605....	EL/EG 80(S)	28x10 R	3.000 mm
04625....	EL/EG 80(S)	28x10 L	3.000 mm
04606....	EL / QS 100 DL/DS 200	32x06 R	4.500 mm
04626....	EL / QS 100 DL/DS 200	32x06 L	3.000 mm
04607....	EL / QS 100 DL/DS 200	32x12 R	3.000 mm
04627....	EL / QS 100 DL/DS 200	32x12 L	3.000 mm
04630....	EL 125	40x07 R	4.000 mm
04631....	EL 125	40x07 L	3.000 mm
04632....	EL 125	40x14 R	3.000 mm
04633....	EL 125	40x14 L	3.000 mm

Code-No.	unit length in mm
04603	1000

Sample ordering code:
Acme screw Tr 24x10 right, unit length 1000 mm.

Acme screw nut

Code-No.	Type	Pitch
04332	EL/EG 30	10x03 R
04333	EL/EG 30	10x03 L
04340	EL/EG 40 / DL 120 / QS 60	18x04 R
04341	EL/EG 40 / DL 120 / QS 60	18x04 L
04342	EL/EG 40 / DL 120 / QS 60	18x08 R
04343	EL/EG 40 / DL 120 / QS 60	18x08 L
04360	EL/EG 60 / DL/DS 160 QS 80	24x05 R
04361	EL/EG 60 / DL/DS 160 QS 80	24x05 L
04362	EL/EG 60 / DL/DS 160 QS 80	24x10 R
04363	EL/EG 60 / DL/DS 160 QS 80	24x10 L
04380	EL/EG 80(S)	28x05 R

Code-No.	Type	Pitch
04381	EL/EG 80(S)	28x05 L
04382	EL/EG 80(S)	28x10 R
04383	EL/EG 80(S)	28x10 L
04310	EL / QS 100 / DL/DS 200	32x06 R
04311	EL / QS 100 / DL/DS 200	32x06 L
04312	EL / QS 100 / DL/DS 200	32x12 R
04313	EL / QS 100 / DL/DS 200	32x12 L
04320	EL 125	40x07 R
04321	EL 125	40x07 L
04322	EL 125	40x14 R
04323	EL 125	40x14 L

Spare Parts

Ballscrew Shaft

Code-No.	Type	Pitch	Unit length L max
04610....	EL/EG 30	8x2,5 R	2.000 mm
04611....	EL/EG 40	16x05 R	3.000 mm
04661....	DL 120 / QS 60	16x05 R	3.000 mm
04612....	EL/EG 40	16x10 R	3.000 mm
04662....	DL 120 / QS 60	16x10 R	3.000 mm
04614....	EL/EG 60	25x05 R	3.000 mm
04615....	EL/EG 60	25x10 R	3.000 mm
04613....	EL/EG 60	20x20 R	3.000 mm
04663....	DL 120 / QS 80 DL/DS 160	20x20 R	3.000 mm
04631....	EL/EG 60	20x05 L	3.000 mm

Code-Nr. unit length in mm

04617	1000

Sample ordering code:
Ballscrew shaft 32x05 right, unit length 1.000 mm.

Code-No.	Type	Pitch	Unit length L max
04664....	DL 120 DL/DS 160 QS 80	25x05R	3.000 mm
04665....	DL 120 DL/DS 160 QS 80	25x10 R	3.000 mm
04616....	EL/EG 80(S)	25x25 R	3.000 mm
04666....	DL 120 DL/DS 160	25x25 R	3.000 mm
04617....	EL/EG 80(S) EL/QS 100 DL/DS 200	32x05 R	3.000 mm
04684....	EL/EG 80(S) EL/QS 100 DL/DS 200	32x05 L	3.000 mm
04618....	EL/EG 80(S) EL/QS 100 DL/DS 200	32x10 R	3.000 mm
04683....	EL 100 DL/DS 200	32x20 R	3.000 mm
04619....	EL 100 DL/DS 200	32x32 R	3.000 mm
04634....	EL 125	40x10 R	3.000 mm
04635....	EL 125	40x20 R	3.000 mm
04636....	EL 125	40x40 R	3.000 mm

Ballscrew nut

Code-No.	Type	Pitch	first greasing	re-greasing*
04430	EL/EG 30	8x2,5 R	0,02 g	0,01 g
04440	EL/EG 40 DL 120 QS 60	16x05 R	4,0 g	1,3 g
04441	EL/EG 40 DL 120 QS 60	16x10 R	2,5 g	0,8 g
04442	DL 120 QS 60	16x16 R	2,0 g	0,6 g
04460	EL/EG 60 DL 120 DL/DS 160 QS 80	25x05 R	6,0 g	2,0 g
04461	EL/EG 60 DL 120 DL/DS 160 QS 80	25x10 R	8,0 g	2,6 g
04462	EL/EG 60 DL 120 DL/DS 160 QS 80	20x20 R	8,0 g	2,6 g

Code-No.	Type	Pitch	first greasing	re-greasing*
04463	EL/EG 60	20x05 L	5,0 g	2,0 g
04464	EL/EG 80(S) DL/DS 160	25x25 R	10,0 g	3,0 g
04480	EL/EG 80(S) EL/QS 100 DL/DS 200	32x05 R	8,0 g	3,0 g
04485	EL/EG 80(S) EL/QS 100 DL/DS 200	32x05 L	8,0 g	3,0 g
04481	EL/EG 80(S) EL/QS 100 DL/DS 200	32x10 R	11,0 g	4,0 g
04483	EL 100 DL/DS 200	32x20 R	11,8 g	4,0 g
04482	EL 100 DL/DS 200	32x32 R	12,6 g	4,0 g
04420	EL 125	40x10 R	25,0 g	8,3 g
04421	EL 125	40x20 R	29,0 g	9,6 g
04422	EL 125	40x40 R	34,0 g	011,3 g

* after approx. 500 hours

nookindustries.com toll-free 1 (800) 321-7800
www.nookindustries.ru (499) 703 35 98 sell@nookindustries.ru

Leading Nut Receiver

For EL / EG units

Ballscrew

Code-No.	Type
03130	30
03140	40
03160	60(S)
03180	80(S)
03110	100
03120	125

Spindle

Acme

Code-No.	Type
03131	30
03141	40
03161	60(S)
03181	80(S)
03111	100
03121	125

For DL / DS units

Code-No.	Type
03163	DL 120
03183	DL/DS 160
03113	DL 200

Ballscrew QSK

Code-No.	Type
03167	60
03187	80
03117	100

Acme QST/K

Code-No.	Type
03166	60
03186	80
03116	100

Lubricants

Code-No.	Name
09001	Molyduval, 1 litre
09002	SKF grease LGMT 2, spindle/bearing, 1 kg
09003	Steel oil gun for carriage rollers
09004	Steel grease gun for ballscrew
09009	regreasing adapter DLT/K 160

Cover caps

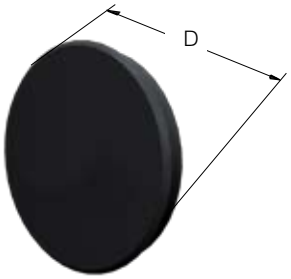

Code-No.	Type	D	Position
04206	QL/QS 60, DL 120	15	Servicing bores
04205	ELK 30	19	Bearing-block
	QL/QS 80		Servicing bores
	QL 60		Carriage
04235	ELZ 30	28	Bearing-block
	ELT/K 40		Bearing-block
	EGT/K 40		Bearing-block
	DL/DS 160		Servicing bores
	QL 80 - 100		Carriage
04245	ELZ 40, ELHZ 60, ELVZ 60	37	Bearing-block
			Carriage
04265	ELZ/MLZ 60, ELHZ 80, ELVZ80, DLZ 120, QLZ/QSZ 60	47	Bearing-block
04285	ELZ/MLZ 80, ELHZ 100, ELVZ 100, DLZ/DSZ 160, QLZ/QSZ 80	68	Bearing-block
04215	ELZ/MLZ 100, DLZ/DSZ 200, QLZ/QSZ 100	90	Bearing-block
04225	ELZ 125	110	Bearing-block

Toothed Belt

Toothed Belt

The maximum length of one belt is 60 m. You can use the maximum power range of belt only from -10 C° to +60 C°. For every increase of temperature of +10 C° you have to reduce capability of belt by 20%. For applications with more than 80 C° the humidity should not be higher than 50%.

Code-No.	length in mm
00534	5000

Sample ordering code:
Belt - 5M 25 steel, 5 m long

PU-belt with steel reinforcement				
Code No.	**Type**	**Standard belt**	**Code No.**	**Widened belt**
00531	**ELZ 30**	3M12		
00532	**ELZ 40**	5M15		
00534	**ELZ/ML 60(S)**	5M25		
00536	**ELZ/ML 80(S)**	8M30		
00538	**ELZ/ML 100**	8M50		
00540	**ELZ 125**	8M70		
00531	**ELZG 30**	3M12		
00532	**ELZG 40**	5M15		
00534	**ELZG 60(S)**	5M25		
00536	**ELZG 80(S)**	8M30		
00542	**ELZZ 60**	5M09		
00543	**ELZZ 80**	8M12		
00544	**ELZZ 100**	8M20		
00536	**ELZZ 125**	8M30		
00531	**ELSZ 30**	3M12	**00532**	5M15
00532	**ELSZ 40**	5M15	**00534**	5M25
00534	**ELSZ 60(S)**	5M25	**00536**	8M30
00536	**ELSZ 80(S)**	8M30	**00538**	8M50
00538	**ELSZ 100**	8M50	**00540**	8M70
00540	**ELSZ 125**	8M70		
00532	**ELSD 40**	5M15	**00534**	5M25
00534	**ELSD 60(S)**	5M25	**00536**	8M30
00536	**ELSD 80(S)**	8M30	**00538**	8M50
00538	**ELSD 100**	8M50	**00540**	8M70
		Main belt		Rotating belt
00534	**ELZT 40**	5M25	**00532**	5M15
00536	**ELZT 60(S)**	8M30	**00534**	5M25
00538	**ELZT 80(S)**	8M50	**00536**	8M30
00540	**ELZT 100**	8M70	**00538**	8M50
00534	**ELHZ 60(S)**	5M25		
00534	**ELHZ 80(S)**	5M25		
00538	**ELHZ 100**	8M50		
00545	**ELHZ 125**	8M50		

PU-belt with steel reinforcement				
Code No.	**Type**	**Standard belt**	**Code No.**	**Widened belt**
00534	**ELVZ 60(S)**	5M25		
00534	**ELVZ 80(S)**	5M25		
00538	**ELVZ 100/125**	8M50		
00534	**ELZW 60(S)**	5M25		
00536	**ELZW 80(S)**	8M30		
00538	**ELZW 100**	8M50		
00531	**ELZU 30**	3M12		
00532	**ELZU 40**	5M15		
00534	**ELZU 60(S)**	5M25		
00536	**ELZU 80(S)**	8M30		
00534	**DLZ 120**	5M25		
00536	**DLZ/DSZ 160**	8M30		
00538	**DLZ 200**	8M50		
		Main belt		Rotating belt
00536	**DLZT/DSZT 120**	8M30	**00534**	5M25
00538	**DLZT/DSZT 160**	8M50	**00536**	8M30
00540	**DLZT/DSZT 200**	8M70	**00538**	8M50
00536	**DLSZ/DSSZ 120**	8M30		
00538	**DLSZ/DSSZ 160**	8M50		
00540	**DLSZ/DSSZ 200**	8M70		
00534	**QLZ/QSZ 60**	5M25		
00536	**QLZ/QSZ 80**	8M30		
00538	**QLZ/QSZ 100**	8M50		
00534	**QLSZ/QSSZ 80**	5M25		

coupling claw on one side

coupling claws on both sides

shaft on one side

shaft on both sides

Pulley size 30-80 bronzed steel, size 100 hard-coated aluminium. Coupling claws compatible with Rotex GS system.

	Code No.		Code No.					
Size	**Coupling claw on one side**	**Coupling claw on both sides**	**Shaft on one side**	**Shaft on both sides**	**Belt**	**Number of teeth**	**mm/ rev.**	**Coupling Rotex**
ELZ / ELSZ / MLZ with standard belt								
30	04010	04020	04828	04829	3M12	25	75	7
40	04011	04021	04830	04831	5M15	20	100	9
60(S)	04012	04022	04832	04833	5M25	26	130	14
80(S)	04013	04023	04834	04835	8M30	24	192	19
100	04014	04024	04836	04837	8M50	32	256	24
125	04015	04025	04838	04839	8M70	38	304	28
ELSZ with widened belt								
30	04011	04021	04830	04831	5M15	20	100	9
40	04012	04022	04832	04833	5M25	26	130	14
60(S)	04013	04023	04834	04835	8M30	24	192	19
80(S)	04014	04024	04836	04837	8M50	32	256	24
100	04015	04025	04838	04839	8M70	38	304	28
ELZG								
30	04820	04821	04840	04841	3M12	40	120	7
40	04822	04823	04842	04843	5M15	32	160	9
60(S)	04824	04825	04844	04845	5M25	44	220	14
80(S)	04826	04827	04846	04847	8M30	40	320	19
ELSD with standard belt								
40	04011	04021	04830	04831	5M15	20	100	9
60(S)	04012	04022	04832	04833	5M25	26	130	14
80(S)	04013	04023	04834	04835	8M30	24	192	19
100	04014	04024	04836	04837	8M50	32	256	24
ELSD with widened belt								
40	04012	04022	04832	04833	5M25	26	130	14
60(S)	04013	04023	04834	04835	8M30	24	192	19
80(S)	04014	04024	04836	04837	8M50	32	256	24
100	04015	04025	04838	04839	8M70	38	304	28
ELZU								
30	04010	04020	04828	04829	3M12	25	75	7
40	04011	04021	04830	04831	5M15	20	100	9
60(S)	04012	04022	04832	04833	5M25	26	130	14
80(S)	04013	04023	04834	04835	8M30	24	192	19

Spare Parts

Toothed Pulleys

Pulley

Size	Code No. Coupling claw on one side	Code No. Coupling claw on both sides	Code No. Shaft on one side	Code No. Shaft on both sides	Belt	Number of teeth	mm/ rev.	Coupling Rotex
ELZT internal belt								
40	04011				5M15	20	100	9
60(S)	04012				5M25	26	130	14
80(S)	04013				8M30	24	192	19
100	04014				8M50	32	256	24
ELZT external belt								
40	04012	04022	04832	04833	5M25	26	130	14
60(S)	04013	04023	04834	04835	8M30	24	192	19
80(S)	04014	04024	04836	04837	8M50	32	256	24
100	04015	04025	04838	04839	8M70	38	304	28
DLZ / DSZ								
DLZ/DSZ 120	04012	04022	04832	04833	5M25	26	130	14
DLZ/DSZ 160	04852	04853	04848	04849	8M30	22	176	19
DLZ/DSZ 200	04854	04855	04850	04851	8M50	28	224	24
DLZT / DSZT internal belt								
120	04012				5M25	26	130	14
DLZT / DSZT external belt								
120	04013	04023	04834	04835	8M30	24	192	19
QLZ / QSZ								
60	04012	04022	04832	04833	5M25	26	130	14
80	04852	04853	04848	04849	8M30	22	176	19
100	04854	04855	04850	04851	8M50	28	224	24
QLSZ / QSSZ								
80	04852	04853	048	04849	8M30	22	176	19

two shafts short

one shaft long

two shafts long

Size	Code No. Two shafts short	Code No. One shaft long	Code No. Two shafts long	Belt	Number of teeth	mm/ rev.	Coupling Rotex
ELHZ / ELVZ							
60(S)	04026	04860	04861	5M25	16	80	14
80(S)	04027	04862	04863	5M25	22	110	19
100	04028	04864	04865	8M50	18	114	24
125	04029	04866	04867	8M50	24	192	28

nookindustries.com toll-free 1 (800) 321-7800

Toothed Pulleys

Pulley
Plug in Shaft
Tensioning Set

Coupling claw on one side

Shaft on one side

Shafts on both sides

	Code No.						
Size	**Coupling claw on one side**	**Shaft on one side**	**Shaft on both sides**	**Belt**	**Number of teeth**	**mm/ rev.**	**Coupling Rotex**
			ELZZ				
60(S)	04856			5M09	26	130	14
80(S)	04857			8M12	24	192	19
100	04858			8M20	32	256	24
125	04859			8M30	38	304	28

Plug-in shaft for pulleys

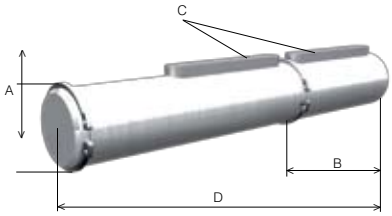

Plug--in shaft made of stainless steel, complete with key and locking rings for retrofitting.

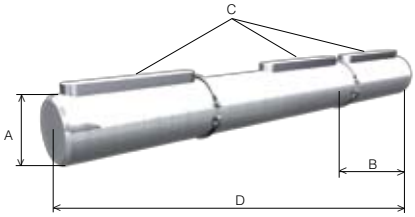

Shaft on one side							Shaft on both sides						
Code-No.	**Type**	**Size**	**A_{h7}**	**B**	**C**	**D**	**Code-No.**	**Type**	**Size**	**A_{h7}**	**B**	**C**	**D**
04030	**ELZ/ELSZ**	**30**	6	15	2x2x12	57	**04040**	**ELZ/ELSZ**	**30**	6	15	2x2x12	72
04031	**ELZ/ELSZ**	**40**	10	27	3x3x25	85	**04041**	**ELZ/ELSZ**	**40**	10	27	3x3x25	112
04032	**ELZ/ELSZ/ MLZ QLZ/QSZ**	**60**	14	35	5x5x28	115	**04042**	**ELZ/ELSZ QLZ/QSZ**	**60**	14	35	5x5x28	150
	DLZ/DSZ DLZT/DSZT	**120**						**DLZ/DSZ DLZT/DSZT**	**120**				
04033	**ELZ/ELSZ/ MLZ QLZ/QSZ**	**80**	18	45	6x6x40	145	**04043**	**ELZ/ELSZ QLZ/QSZ**	**80**	18	45	6x6x40	190
	DLZ/DSZ	**160**						**DLZ/DSZ**	**160**				
	DLSZ/DSSZ	**120**						**DLSZ/DSSZ**	**120**				
04034	**ELZ/ELSZ/ MLZ**	**100**	22	45	6x6x40	175	**04044**	**ELZ/ELSZ**	**100**	22	45	6x6x40	220
	DLSZ	**160**						**DLSZ**	**160**				
04035	**ELZ**	**125**	30	45	8x7x40	215	**04045**	**ELZ**	**125**	30	45	8x7x40	270

Tensioning set for sizes EL 100 - 125, DL/DS 200, ML / QL / QS 100

Code-No.	Type	Tension ring
00472	**EL/ML 100 DL/DS 200 QL/QS 100**	22 x 32
00479	**E 125**	30 x 41

Belt Adjuster ELZ / MLZ

Code-No.	Type	Material
04060	30	Zinc coated steel
04061	40	Zinc coated steel
04062	60(S)	Zinc coated steel
04063	80(S)	Zinc coated steel
04064	100	Zinc coated steel
04065	125	Zinc coated steel

Belt adjuster ELSZ

Code-No.	Type	Material
04071	30/40	Zinc coated steel
04076	30/40	Nickel faced steel
04072	60(S)	Zinc coated steel
04077	60(S)	Nickel faced steel
04073	80(S)	Zinc coated steel
04078	80(S)	Nickel faced steel
04074	100	Zinc coated steel
04079	100	Nickel faced steel
04075	125	Zinc coated steel
04070	125	Nickel faced steel

Belt adjuster ELHZ

Code-No.	Type	Material
04080	60(S)	Black anodized Al and zinc coated steel
04081	80(S)	Black anodized Al and zinc coated steel
04082	100	Black anodized Al and zinc coated steel
04083	125	Black anodized Al and zinc coated steel

Belt adjuster ELVZ

Code-No.	Type	Material
04090	60(S)	Black anodized Al and zinc coated steel
04091	80(S)	Black anodized Al and zinc coated steel
04092	100	Black anodized Al and zinc coated steel
04093	125	Black anodized Al and zinc coated steel

Belt adjuster

DLZ
DSZ

DLSZ
DSSZ

QLZ
QSZ

Code-No.	Type	Material
04084	DLZ/DSZ 120	Nature anodized Al and zinc coated steel
04086	DLZ/DSZ 160	Nature anodized Al and zinc coated steel
04085	DLZ/DSZ 200	Nature anodized Al and zinc coated steel
04066	DLSZ 120	Zinc coated steel
04067	DLSZ/DSSZ 160	Zinc coated steel
04087	QLZ/QSZ 60	Nature anodized Al
04088	QLZ/QSZ 80	Nature anodized Al
04089	QLZ/QSZ 100	Nature anodized Al

Accessories

Square Nut

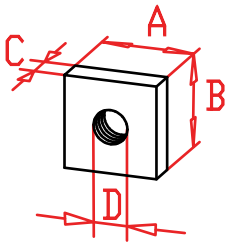

Slide Nuts

Slide nuts position refer to chapter 2.2 page 3
Material: galvanized steel

Code-No.	Type	A	B	C	D
02708	**M 4**	7	7	2,2	M 4
02710	**M 5**	8	8	2,7	M 5
02715	**M 6**	10	10	3,2	M 6
02714	**M 8**	13	13	4	M 8
02713	**M 10**	17	17	5	M 10
02721	**M 10**	25	20	8	M 10

T-nut

Slide nuts position refer to chapter 2.2 page 3
Material: galvanized steel

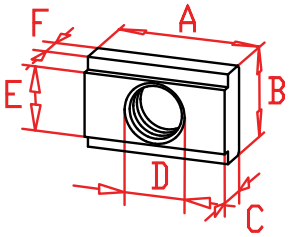

Code-No.	Type	A	B	C	D	E	F
02709	**M 5**	14	8,1	4,5	M 5	14	6
02716	**M 6**	14	8,1	4,5	M 6	14	6
02718	**M 8**	18	8,1	4,5	M 8	14	6
02719	**M10**	22	8,1	4,5	M 10	14	6
02730	**M 6**	13	10	4	M 6	15	8
02731	**M 8**	13	10	4	M 8	15	8

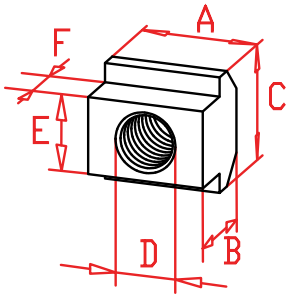

Code-No.	Type	A	B	C	D	E	F
02734	**M 5**	10	8	10	M 5	6	4
02735	**M 6**	13	10	13	M 6	8	4
02736	**M 8**	15	12	15	M 8	10	6
02720	**M 10**	18	14	18	M 10	12	7
02722	**M 12**	22	16	22	M 12	14	8
02737	**M 16**	28	20	28	M 16	18	10

Half round nut

For guide body profile EL, ML, QL / QS and for fastening of jointing and mounting blocks. Material: galvanized steel

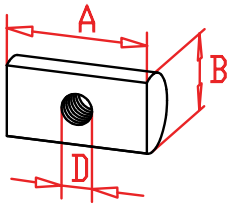

Code-No.	Type	A	B	D
02724	**M 3**	28	5	2x M 3
02725	**M 5**	14	6	M 5
02726	**M 6**	18	10	M 6
02728	**M 8**	22	12	M 8
02729	**M 8**	22	16	M 8
02723	**M10**	25	20	M10

nookindustries.com toll-free 1 (800) 321-7800
www.nookindustries.ru (499) 703 35 98 sell@nookindustries.ru

T-nut Allocation

Bearing block profile EL

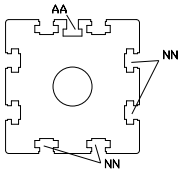

Size	T-slot nut slot AA Code No.	T-slot nut slot NN Code No.
30	02715	02715
40	02710	02715
60(S)	02710	02718
80(S)	02714	02719
100	02714	02720
125	02736	02722

Bearing block profile ELZ

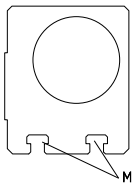

Size	T-slot nut slot M Code No.
40	02735
60	02731/02719
80(S)	02736
100	02720
125	02722

Guide body profile E

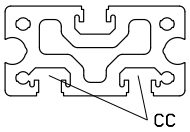

Size	T-slot nut slot CC Code No.
40	02730 / 02731
60	02730 / 02731
80	02730 / 02731

Guide body profile ML

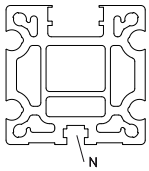

Size	T-slot nut slot N Code No.
60	02716/02718
80 (S)	02719
100	

Guide body profile EL / EG

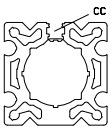

Size	T-slot nut slot CC Code No.
EL 30	02715
EL/EG 40	02718
EL/EG 60	02718
EL/EG 80(S)	02718
EL 100	02721
EL 125	02721

Guide body profile

DL / DS / QL / QS

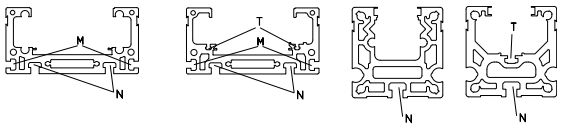

Size	T-slot nut slot N Code No.	T-slot nut slot M Code No.	T-slot nut slot T* Code No.
DL 120	02735	02734	-
DL/DS 160	02736	02735	02708
DL/DS 200	02720	02736	-
QL/QS 60	02734	-	02708
QL/QS 80	02735	-	02710
QL/QS 100	02720	-	02716

* only for DS/QS guide body profile

Guide body profile ALLM

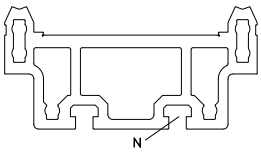

Size	T-slot nut slot N Code No.
200	02737

Carriage profile EL / EG

Size	T-slot nut slot OO Code No.	T-slot nut slot MM Code No.
30	02715	-
40	02716/02709	-
60	02718	-
60S	02718	-
80	02718/02719	02715
80S	02736	02735
100	02720	02713
125	02722	02720

EL/ML

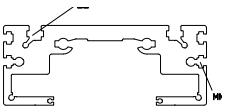

EG

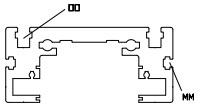

Carriage profile DL / DS / QL / QS

Size	T-slot nut slot O Code No.	T-slot nut slot M Code No.
DL 120	02735	-
DL/DS 160	02736	-
DL/DS 200	02720	-
QL/QS 60	-	02735
QL /QS 80	-	02736
QL/QS 100	-	02720

DL

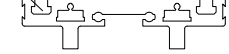

DS

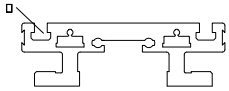

QL/QS

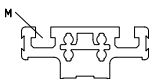

Slide nut dimensions refer to chapter 2.2 page 2

2.2

Handwheel with keyway and locking screw

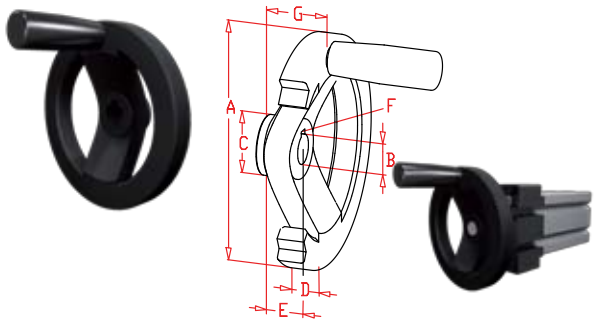

Handwheel Positional Indicator Clamp

A plastic coated aluminium handwheel with a matt black finish. Equiped with a black handle.

Code-No.	Type	A	B	C	D	E	F	G
00050	**30**	70	5	17	13	15	-	20
00100	**40**	100	10	29	14,5	17	3x3	30
00160	**60**	140	14	36	16,5	19	5x5	36
00200	**80**	200	18	42	20,5	24	6x6	45
00222	**100**	200	22	42	20,5	24	6x6	45

Positional indicator EL / EG

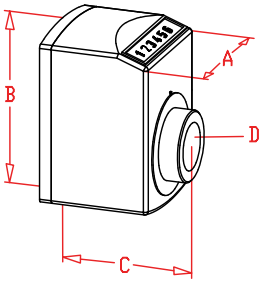

Code No. 00265 - 00268 electronical indicator

SH = Increasing Valves
SV = Decreasing Valves
V = Vertical
FH = Increasing Valves
FV = Decreasing Valves
H = Horizontal

SH-FH

SV-FV

Shell made of polyamide orange. Ambient temperature 80°C. Any fitting position possible. Numeral height 6 mm. Accuracy of reading 0,1 mm.

Code-No.	Size	AxBxC	D	type	pitch (mm)
00231..	**30**	33x47x31	6	SH	2,5 or 3
00232..	**30**	33x47x31	6	FH	2,5 or 3
00233..	**30**	33x47x31	6	SV	2,5 or 3
00234..	**30**	33x47x31	6	FV	2,5 or 3
00241..	**40, 60, 80**	48x67x51	12,17,20	SH	4 or 8
00242..	**40, 60, 80**	48x67x51	12,17,20	FH	4 or 8
00243..	**40, 60, 80**	48x67x51	12,17,20	SV	4 or 8
00244..	**40, 60, 80**	48x67x51	12,17,20	FV	4 or 8
00251..	**40, 60, 80**	48x67x51	12,17,20	SH	5 or 10
00252..	**40, 60, 80**	48x67x51	12,17,20	FH	5 or 10
00253..	**40, 60, 80**	48x67x51	12,17,20	SV	5 or 10
00254..	**40, 60, 80**	48x67x51	12,17,20	FV	5 or 10
00261..	**100, 125**	56x75x64	25,30	SH	6 or 12
00262..	**100, 125**	56x75x64	25,30	FH	6 or 12
00263..	**100,125**	56x75x64	25,30	SV	6 or 12
00264..	**100, 125**	56x75x64	25,30	FV	6 or 12
00265..	**40, 60, 80**	48x87x71	12,17,20	SH	0,01 - 10
00266..	**40, 60, 80**	48x87x71	12,17,20	FH	0,01 - 10
00267..	**40, 60, 80**	48x87x71	12,17,20	SV	0,01 - 10
00268..	**40, 60, 80**	48x87x71	12,17,20	FV	0,01 - 10

0024108

Sample odering code: size 40, 8 mm pitch increasing horizontal.

Spindle clamp EL / EG, DL / DS /QST/K

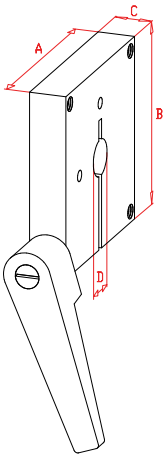

Black anodized aluminium, steel hand lever.

Code-No.	Type	A	B	C	D	Hand-lever
00291	**EL/EG 30**	43	50	10	6	M 6
00292	**EL/EG 40**	58	70	10	12	M 6
00293	**EL/EG 60**	80	80	15	17	M 8
00294	**EL/EG 80**	100	100	20	20	M10
00295	**E 100**	130	130	20	25	M10
00296	**E 125**	-	-	-	-	-
00283	**DL/DS 120**	62	80	15	12	M 6
00284	**DL/DS 160**	80	90	20	17	M 8
00285	**DL/DS 200 QST/K 100**	90	99	20	25	M 10
00286	**QST/K 80**	80	90	20	?	M 8
00287	**QST/K 60**	62	80	15	?	M 6

Carriage clamp EL / ML / EG

Carriage with carriage clamp. Carriage length can be chosen as required. Depending on type of drive (screw or belt) the position of clamp can be different. Dimensions by inquiry.

Code-No.	Type
00312	EG 40
00313	EG 60
00314	EG 80
00302	EL 40
00303	EL/ML 60
00304	EL/ML 80
00305	EL/ML 100
00306	EL 125

Assembly plate

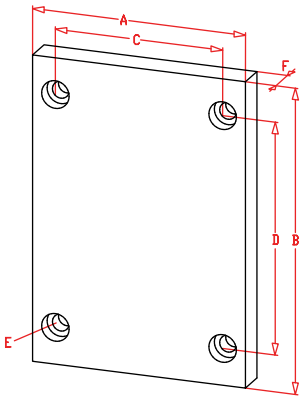

Assembly plate, anodized aluminium, enables various units to be assembled in a simple manner when combinations of linear units are to be used. Complete with screws and slide-nuts. Tapped holes can be made on request.

Code-No.	Type	A	B	C	D	E for	F
00940	EG 40	100	70	86	52	M 6	12
00960	EG 60	144	100	126	80	M 8	15
00980	EG 80	170	140	152	110	M10	15
00935	EL 30	70	70	56	56	M 6	10
00945	EL 40	100	100	84	66	M 6	12
00965	EL/ML 60	144	144	126	96	M 8	15
00964	EL/ML 60 S	170	170	152	108	M 8	15
00985	EL/ML 80	170	170	152	117	M10	15
00984	EL/ML 80 S	190	190	172	126	M 8	15
00915	EL/ML 100	270	230	248	155	M10	20
00925	EL 125	335	295	285	200	M12	20
00966	DL/DS 120	140	120	122	96	M 6	12
00986	DL/DS 160	180	160	162	130	M 8	15
00916	DL/DS 200	240	200	218	168	M 10	20
00967	QL 60	140	60	122	36	M 6	12
00987	QL 80	180	80	162	50	M 8	15
00917	QL 100	240	100	218	66	M10	20
00926	QS 60	165	60	147	36	M6	12
00928	QS 80	216	80	198	50	M8	15
00911	QS 100	248	100	226	66	M10	20

EL/EG

QL/QS

DL/DS

Contact Nook Application Engineer for Custon Assembly Plates.

Accessories

Support and mounting block

Mounting Systems

EL / ML

EG

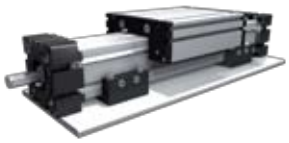

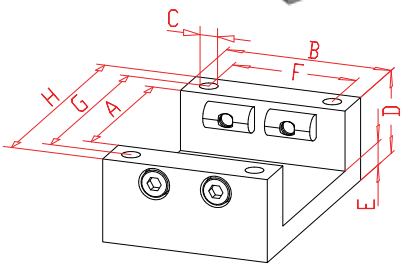

Black anodized aluminium, for mounting and for supporting long units. These components can be ready mounted on the units by us to customer's specification. Mounting can be clear or tapped holes and slide-nuts.

Code-No.	Type	A	B	C	D	E	F	G	H
03043	EG 40	40	40	6,5	24,0	9	1 hole	50	60
03063	EG 60	60	60	9,0	35,0	11		75	90
03083	EG 80	80	80	10,5	39,0	11	60	100	120

DL/DS

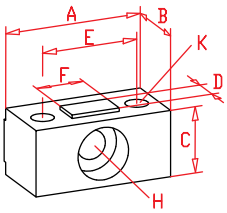

Code-No.	Type	A	B	C	D	E	F	G	H for	K for
03001	DL/DS 120	34	17	14	6	22	10	134	M6	M5
03002	DL/DS 160	40	20	19	8	28	14	179	M8	M6
03003	DL/DS 200	50	30	24	10	34	18	224	M10	M8

Jointing block EL / ML / DL / DS

EL / ML

DL / DS

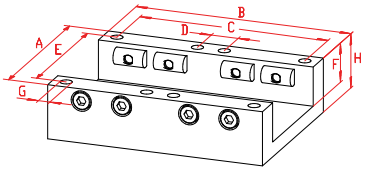

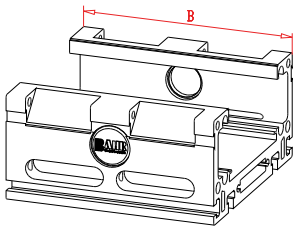

Anodized aluminium. For joining body profiles longer than standard.

Code-No.	Type	A	B	C	D	E	F	G	H
03031	EL 30	48	60	30	1 hole	38	11,5	4,2	17,5
03041	EL 40	60	80	40		50	15	6,5	24
03061	EL/ML 60	90	120	60		75	24	8,5	35
03081	EL/ML 80	120	160	140	20	100	29	10,5	40
03011	EL/ML 100	140	200	170	30	120	40	8,5	55
03021	EL 125	170	250	210	40	150	47,5	11	67,5
03090	DL 120	-	120	-	-	-	-	-	-
03091	DL/DS 160	-	160	-	-	-	-	-	-
03092	DL/DS 200	-	200	-	-	-	-	-	-
03093	ALL 200	-	240	-	-	-	-	-	-

Mounting profile EL / ML / Q

Mounting Systems

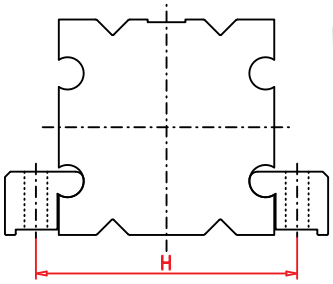

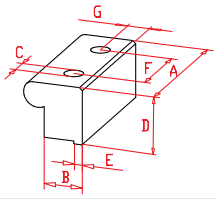

Black anodized aluminium, for mounting.
Mounting can be clear or tapped holes. Pair (without screws)

Code-No.	Type	A	B	C	D	E	F	G	H
03039	EL 30	24	11,5	5,5	10	3	12	6,5	41
03049	EL 40	32	15,5	6,5	13	4	16	9	54
03069	EL/ML/Q 60	48	17,5	8,5	18	4	24	9,5	77
03089	EL/ML/Q 80	64	19,5	8,5	23,5	4	32	11,5	97
03019	EL/Q 100	80	21,5	10,5	30,5	4	40	12	120
03029	EL 125	100	27	13	40	6	50	15,5	149

2.2

Mounting profile EL / ML / Q

Black anodized aluminium, for mounting and for supporting long units. These components can be ready mounted on the units by us to customer's specification. Mounting can be clear or tapped holes and slide-nuts.

Code-No.	Type	A	B	C	E	F	G	H
030301	EL 30	54	30	20	38	10	4,2	6
030401	EL 40	72	40	26	50	13	6,4	9
030601	EL/ML/Q 60	96	60	40	75	18	8,5	10,8
030801	EL/ML/Q 80	120	80	60	100	23,5	10,5	10,8
030101	EL/ML/Q 100	144	100	70	120	30,5	10,5	14,8
030201	EL 125	180	125	85	150	40	11	20

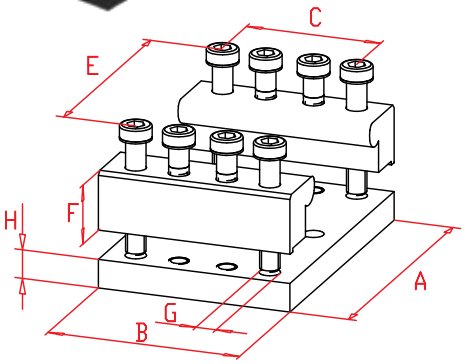

Jointing profile EL / ML / Q

Black anodized aluminium. For joining body profiles longer than standard.

Code-No.	Type	A	B	C	E	F	G	M
030312	EL 30	54	60	50	38	10	4,2	10
030412	EL 40	72	80	66	50	13	6,4	14
030612	EL/ML/Q 60	96	120	100	75	18	8,5	20
030812	EL/ML/Q 80	120	160	140	100	23,5	10,5	20
030112	EL/ML/Q 100	144	200	170	120	30,5	10,5	30
030212	EL 125	180	250	210	150	40	11	40

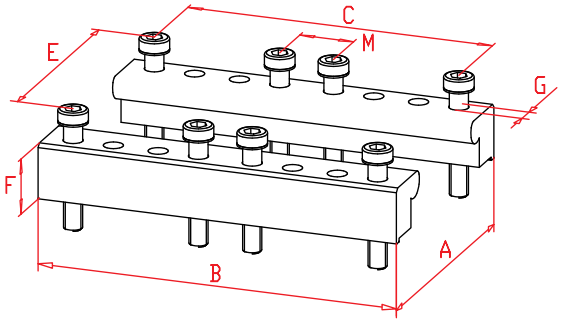

Accessories

Jointing profile EL / ML / Q

Black anodized aluminium, for jointing, mounting and supporting long units. These components can be ready mounted on the units by us to customer's specification. Mounting can be clear or tapped holes and slide-nuts.

Mounting Systems

Code-No.	Type	A	B	C	E	F	G	H	M
030311	EL 30	54	60	50	38	10	4,2	6	10
030411	EL 40	72	80	66	50	13	6,4	9	14
030611	EL/ML/Q 60	96	120	100	75	18	8,5	10,8	20
030811	EL/ML/Q 80	120	160	140	100	23,5	10,5	10,8	20
030111	EL/ML/Q 100	144	200	170	120	30,5	10,5	14,8	30
030211	EL 125	180	250	210	150	40	11	20	40

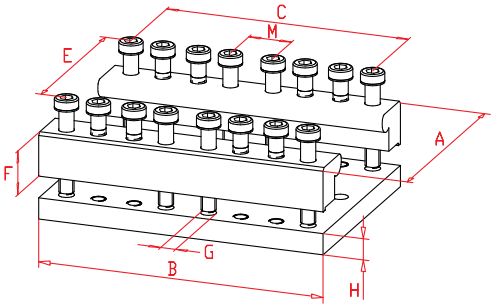

Parallel mounting block EL / ML

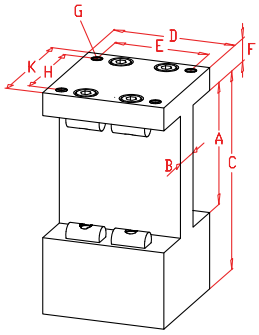

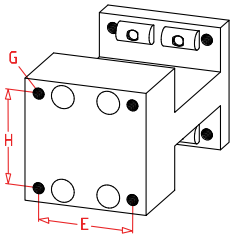

Black anodized aluminium. For parallel mounting of two units.

Code-No.	Type	A	B	C	D	E	F	G	H	K
03042	40	40	18	85	58	50	10	M 6	50	58
03062	60	60	22	123	70	54	15	M 8	54	70
03064	60S	60	22		60	54	15	M 8	54	70
03082	80	80	22	145	80	62	15	M 8	62	80
03084	80S	80	22	155	80	62	15	M 8	62	80
03012	100	100	30	200	110	90	20	M10	90	110
03022	125	125	40	253	135	115	22,5	M12	115	135

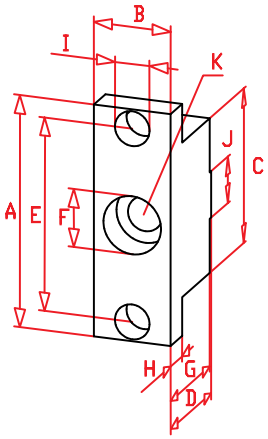

Black anodized aluminium. Support and mounting block for E40, 60, 80. By using this mounting block you will reach the same level of heigths as EL-units with support. Assembling by through holes (frame) and slide-nuts (unit).

Code-No.	Type	A	B	C	D	E	Ø F	G	H	Ø I	J	Ø K
03048	E 40	60	20	40	28	50	15	27	8	6,6	12	9
03068	E 60	90	25	59	41,7	75	15	40,7	10	9	12	9
03088	E 80	120	30	80	51,8	100	15	50,8	15	10,5	12	9

nookindustries.com toll-free 1 (800) 321-7800
www.nookindustries.ru (499) 703 35 98 sell@nookindustries.ru

Double mounting block with motor housing

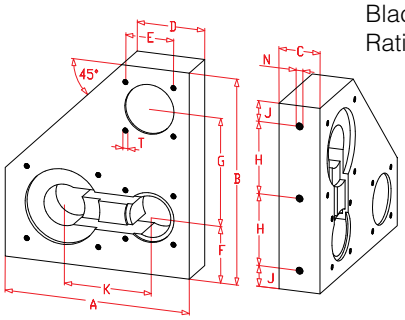

Black anodized aluminium, including pulleys and belt for the drive.
Ratio 1:1

Code-No.	Type	A	B	C	D	E	F	G	H	J	K	N	T
03050	**40**	180	200	40	66	47	55	105	70	20	85	M8	M6
03051	**60**	205	304	50	74	68,6	80	164	87,5	15	125	M8	M8

Angular mounting block

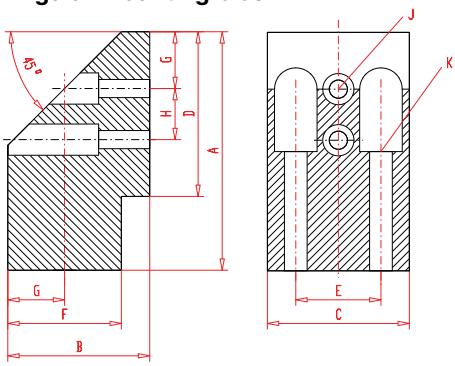

Black anodized aluminium.

Code-No.	Type	A	B	C	D	E	F	G	H	J Ø	K Ø
03055	**40**	84	50	50	58	30	40	20	18	6,4	8,4
03056	**60**	117	50	59	80	36	40	20	30	9	9

Proximity / limit switch holder EG

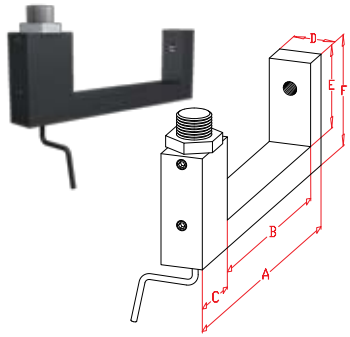

Black anodized aluminium bracket, fixed by grub screws. Position along the length of the units is adjustable. Fixing holes for proximity and limit switches are provided.

Code-Nr.	Type	A	B	C	D	E	F	Drill hole
01340	**EG 40**	72	40	24	15	19	28	8,2
01360	**EG 60**	92	60	24	15	26	35	12,2
01380	**EG 80**	114	81	24	15	30	40	12,2

Proximity / limit switch holder EL

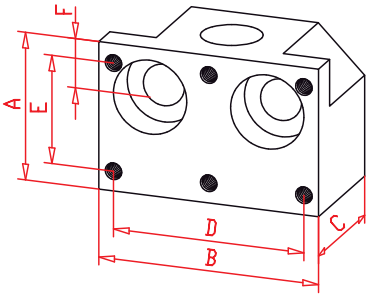

Black anodized aluminium bracket, fixed by screws into with half-round nuts in the body half-round-slots, hence position axially adjustable. Fixing holes for proximity and limit switches are provided. Complete with screws and half-round nuts.

Code-No.	Type	A	B	C	D	E	F	Drill hole
01331	**EL 30**	12	30	12	-	-	6	8,2
01341	**EL 40**	28	32	25	26	22	8	8,2
01361	**EL 60**	30	40	25	32	22	11	12,2
01381	**EL 80**	30	45	25	39	22	10	12,2
01311	**EL 100**	40	55	20	49	22	12	12,2
01321	**EL 125**	45	60	25	52	22	12,5	12,2
01300	**EL60-125**	Reducing sleeve Ø 12 to Ø 8						

Accessories

Limit switch

Switches

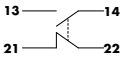

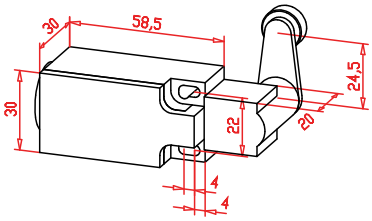

Fully insulated thermoplastic switch with adjustable operation lever. The operation device can be turned by 90°, the lever can be turned to engage by 360°.

Max. voltage	380 V
Max. constant current	6 A
Max. current at make	16 A
Duty classification	max.6000/h
Mechanical lifetime	1 x 10^7
Operating repeatability	± 0,01
Transit time/snap switch	ca. 10 ms
Protection class	IP 65 (DIN 40050)
Working temperature	-30° C to +80° C

Code-No.	choice
01101	standard
01102	M16x1,5 connector
01101ex	Version ATEX

Limit switch

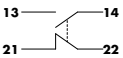

3 electromechanical switches in a row.

Nominal voltage	250 V
Cont. current	6 A
Switch rate	max.300/min.
Mech. Lifetime	>30 Mio.
Repeatability	± 0,01 mm
Transit time/snap switch	ca. 10 ms
Protection class	IP 67 (DIN 60529)
Working temperature	-5° C bis +80° C

Code-No.	choice
01105	switch system *

* consisting of 2 cam ledges and 3 cams

Proximity switch

Inductive proximity switch

* NPN and other sensor options avaliable.
Contact Nook App Eng.

Code-No.	Type	Switch distance	Volt-age	Output-current	Switching-function	Protec-tion class
01003	30, 40 M8	1 mm	10 - 30 V	200 mA	PNP brake contact	IP 67
01004	30, 40 M8	1 mm	10 - 30 V	200 mA	PNP make contact	IP 67
01001	60-125 M12	2 mm	10 - 30 V	200 mA	PNP brake contact	IP 67
01002	60-125 M12	2 mm	10 - 30 V	200 mA	PNP make contact	IP 67
010014	Q 8x8	2 mm	10 - 30 V	200 mA	PNP brake contact	IP 67
010013	Q 8x8	2 mm	10 - 30 V	200 mA	PNP make contact	IP 67

nookindustries.com toll-free 1 (800) 321-7800
www.nookindustries.ru (499) 703 35 98 sell@nookindustries.ru

Proximity switch DL / DS

Switches

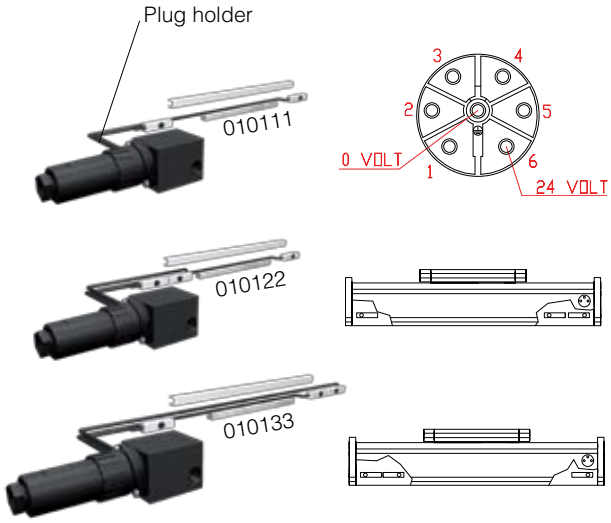

Inductive proximity switch, integrated in guide body profile DL. In standard version, limit switches are designed as break contacts, and reference switches are designed as make contacts

Code-No.	Type
010111	2 integrated inductive proximity switches as limit switch
010122	2 integrated inductive proximity switches as limit switch, 1 reference switch right
010133	2 integrated inductive proximity switches as limit switch, 1 reference switch left
01322	Plug holder right
01323	Plug holder left

Technical data for plug:
Working temperature -40° / +90°
Protection class IP65
inflammability UL-standard 94VO

Proximity / limit switch holder DL / DS / QL / QS

Proximity / limit switch holder for guide body profile DL/DS/QL/QS

Code-Nr.	Type
01327-0	Base holder for a limit switch
01327-1	Base holder for a proximity and a limit switch
01328-0	plug in holder for a proximity switch M8x1
01329-0	plug in holder for a proximity switch M12x1
01330-0	plug in holder for a proximity switch Q 8x8
01335-0	Sensor holder DL/DS 120 / QL/QS 60 H = 46,5mm
01335-1	Sensor holder DL/DS 160 H = 50,5mm
01335-2	Sensor holder QL/QS 80 H = 52,5mm
01335-3	Sensor holder DL/DS 200 H = 48 mm
01335-4	Sensor holder QL/QS 100 H = 57 mm

* stainless steel grub screws

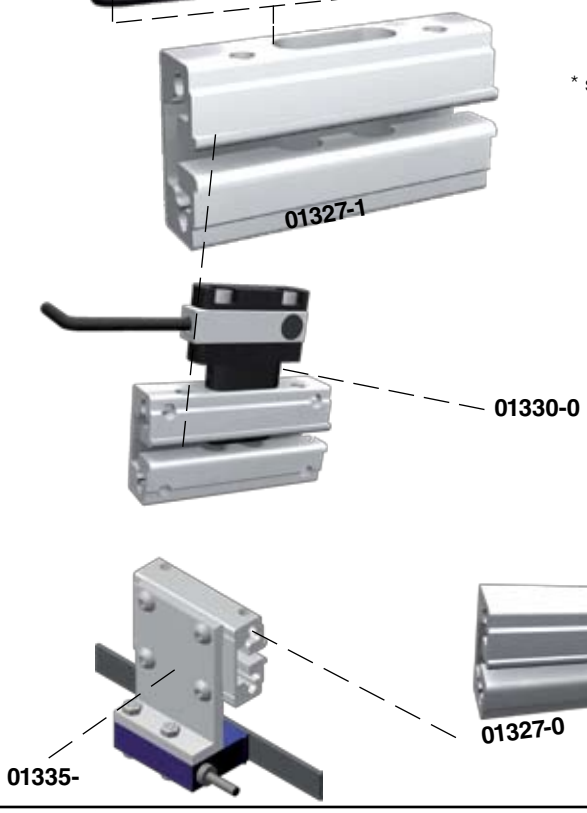

Accessories

Activating Strip DL / DS

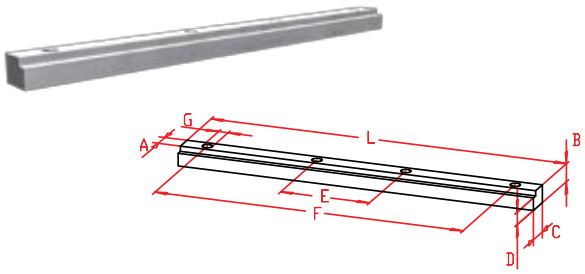

For internal proximity switches.

Code-No.	Type	A	B	C	D	E	F	G	L
04870	DL/DS 120	2,9	8,5	7	5,9	46	99	3,5	120
04871	DL/DS 160	6	6	8	4,3	30	104	3,5	120
04872	DL /DS 200								

Activating sheet EL / ML / EG

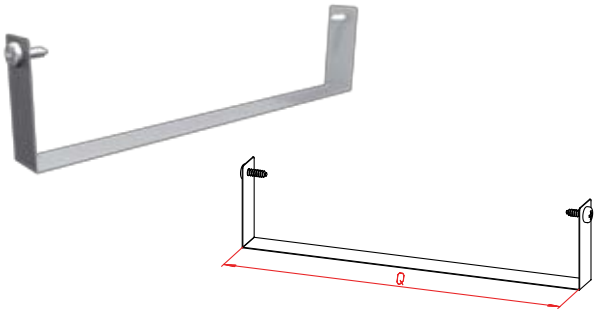

For external mounting proximity switches.

Code-No.	Type	Q
01000	EL 30	Carriage length
01005	EL 40	Carriage length
01006	EL/ML 60	Carriage length
01011	EL/ML 60S	Carriage length
01007	EL/ML 80	Carriage length
01010	EL/ML 80S	Carriage length
01008	EL/ML 100	Carriage length
01009	EL 125	Carriage length
01018	DL/DS 120	Carriage length
01017	DL/DS 160	Carriage length
01016	DL/DS 200	Carriage length
01030	QL/QS 60	Carriage length
01031	QL/QS 80	Carriage length
01032	QL/QS 100	Carriage length

Activating sheet QL / QS - DL / DS

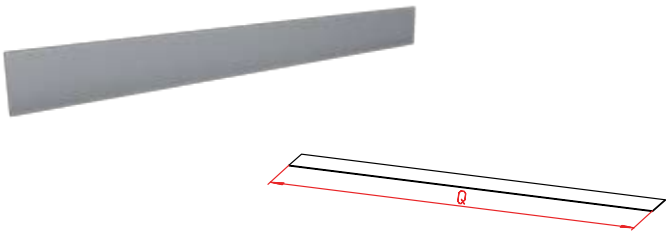

Coupling

Coupling

Torsionally elastic coupling with keyway and clamp.
Light pre-load provides backlash-free torque transmission.

Code-No.	Type	ØA/B (min/max)	C	D	E	F	Torque	
01400-	**7**	3 / 7	7	14	22	DIN-key	2 Nm	top torque x2
01401-	**9**	5 / 12	10	20	30		6 Nm	
01410-	**14**	5 / 16	11	30	35		12 Nm	
01420-	**19**	6 / 22	25	40	66		17 Nm	
01430-	**24**	10 / 28	30	55	78		60 Nm	
01440-	**28**	18 / 38	35	65	90		160 Nm	
01450-	**38**	30 / 45	45	80	114		325 Nm	

01401-	**08**	**10**

Sample ordering code:
Coupling type 9, ØA = 8 mm, ØB = 10 mm

Coupling for toothed belt units

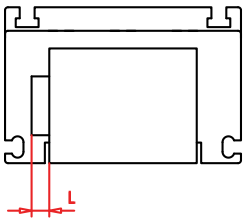

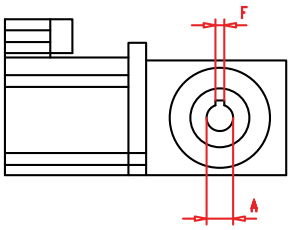

Torsionally elastic coupling with keyway and clamp. Light pre-load provides backlash-free torque transmission.

Code-No.	Type	Ø A (min/max)	L	Size	F	Torque	
03400-	**7**	3 / 7	7	**EL 30**	DIN-key	2 Nm	top torque x2
03401-	**9**	5 / 12	10	**EL 40**		6 Nm	
03410-	**14**	5 / 16	11	**EL/ML 60 DL 120 QL/QS 60**		12 Nm	
03420-	**19**	6 / 22	25	**EL/ML 80 DL/DS 160 QL/QS 80**		17 Nm	
03430-	**24**	10 / 28	30	**EL/ML 100 QL/QS 100 DL 200**		60 Nm	
03440-	**28**	18 / 38	35	**EL 125**		160 Nm	

03410-	**12**

Sample ordering code:
Coupling type 14, ØA = 12 mm

Coupling with tension ring

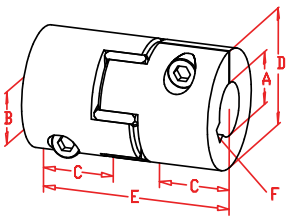

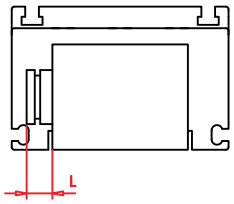

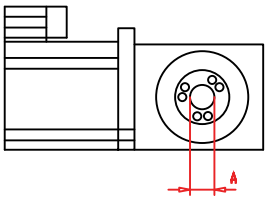

Coupling, to be clamped by tension ring.

Code-No.	Type	Ø A	L	Size	Torque	
03501-	14	5, 10, 14	19	**EL/ML 60 DL 120 QL/QS60**	12 Nm	top torque x2
03510-	19	10, 14, 16, 19	25	**EL/ML 80 DL/DS 160 QL/QS 80**	17 Nm	
03520-	24	19, 20, 22, 24	30	**EL/ML 100 QL/QS 100 DL 200**	60 Nm	
03530-	28	38	35	**EL 125**	160 Nm	

03510-	**16**

Sample ordering code:
Coupling type 19, ØA = 16 mm

Complete bellows EL / ML / EG

Bellows

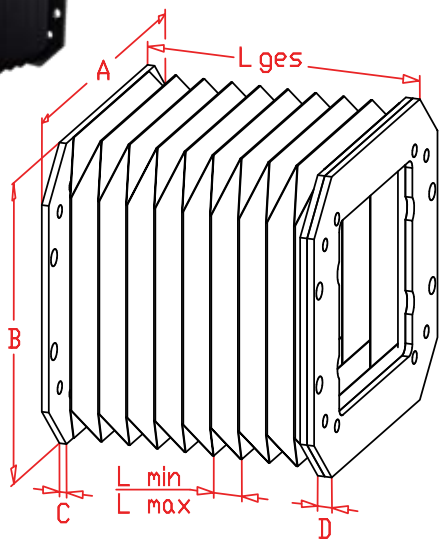

Code-No.	Type	A	B	C	D	Fold	
						L_{min}	L_{max}
02940	**EL/EG 40** spindle	73	69	5	10	3	15
02941	**EL/EG 40** belt drive	73	75	5	10	3	15
02960	**EL/EG 60** spindle	99	94	5	10	3	20
02961	**EL/ML/EG 60** belt drive	99	101	5	10	3	20
02980	**EL/EG 80** spindle	130	124	5	10	3	25
02981	**EL/ML/EG 80** belt drive	130	138	5	10	3	25
02910	**EL 100** spindle	165	155	5	10	3	30
02911	**EL/ML 100** belt drive	165	170	5	10	3	30

Bellow frame, zinc-plated plastic bellows with steel connection plates, max. 60° C.

02980	500

Sample ordering code: Size 80 spindle, unit length L = 500 mm.

Complete bellows DL / DS

Bellow ERA7815, max. 120°, bellow frame PVC.

Code-No.	Type	A	B	C	Fold	
					L_{min}	L_{max}
02901	**DL/DS 120**	120	19	1	4	22
02902	**DL/DS 160**	160	24	1	4	31
02903	**DL/DS 200**	200	28	1	4	28

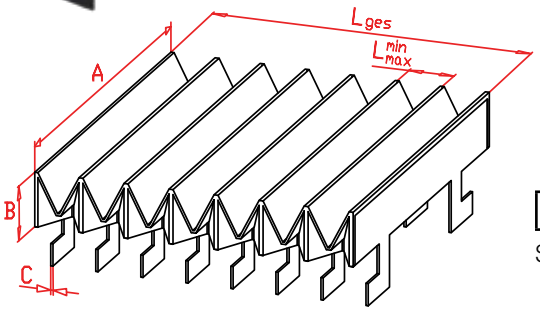

02902	500

Sample ordering code: Size 160, unit length L = 500 mm.

nookindustries.com toll-free 1 (800) 321-7800
www.nookindustries.ru (499) 703 35 98 sell@nookindustries.ru

Bevel gear pair EL / EG

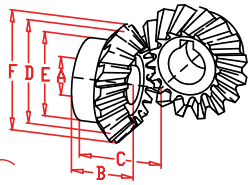

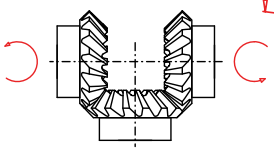

C 45 steel, helical gear, with keyway.

Angular Gear Box

Code-No.	Type	i	Modul	Number of teeth	A_{h7}	B	C	D	E	F	max. rpm (min^{-1})
00631	**30**	1:1	1	22	5	15	22	22	19	23,5	250
00641	**40**	1:1	2	16	10	13	28	-	22	35	560
00642	**40**	1:1,5	1,5	16	10	17	30	24	20	27	560
				24		17,5	27	36	26	38	840
00661	**60**	1:1	2,5	16	14	18,5	33	-	30	43	750
00662	**60**	1:1,5	2	16	14	21	38	32	26	36	560
				24		23	35	48	35	51	840
00681	**80**	1:1	3	16	18	23	40	-	35	51,5	750
00682	**80**	1:1,5	3	16	18	28	54	48	40	53	560
				24	19	30	49	72	50	76	840
00611	**100**	1:1	4	16	22	35,5	54	-	45	69,7	750
00612	**100**	1:1,5	3	16	22	27,7	50	48	34	53	560
				24		31	44	72	38	76	840

Combination cube EL / EG
Cover caps

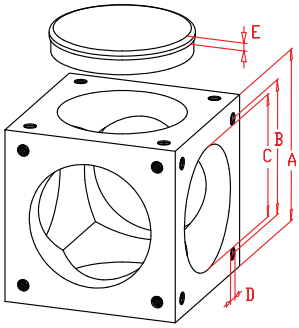

Combination cube					
Code-No.	**Type**	**A**	**B**	**C**	**D**
00830	**30**	52	35	40	M 4
00840	**40**	66	47	48	M 6
00860	**60**	92	69	62	M 8
00880	**80**	112	88	80	M 8
00810	**100**	148	112	110	M10
Cover caps					
01830	**30**	Black plastic. To cover empty cube sides.			
01840	**40**				
01860	**60**				
01880	**80**				
01810	**100**				

Black anodized aluminium. Used for connecting modules at right angles or in line.

Motor adapter

Black anodized aluminium, can be designed for any motor. Simple assembly, accurate alignment.

Code-No.	Type
01531	**EL/EG 30** spindle
01541	**EL/EG 40** spindle
01561	**EL/ML/EG/QS 60 / DL/DS 120** spindle
01581	**EL/ML/EG 80 / DL/DS 160 / QS 80** spindle
01511	**EL/ML 100 / DL/DS 200** spindle
01521	**EL 125** spindle
01831	**EL 30** belt-drive
01841	**EL 40** belt-drive
01861	**EL/ML 60 / DL/DS 120 / QL/QS 60** belt-drive
01881	**EL/ML 80 / DL/DS 160 / QL/QS 80** belt-drive
01811	**EL/ML 100 / QL/QS 100 / DL/DS 200** belt-drive
01821	**EL125** belt-drive

toll-free 1 (800) 321-7800 nookindustries.com
www.nookindustries.ru (499) 703 35 98 sell@nookindustries.ru

Accessories

Angular gear box EL / EG

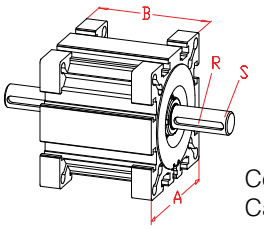

Complete self- centering gear. Can easily be retrofitted to any EG or EL unit. Packed with grease for lubrication.

Angular gear box

Code No.	Type	i	m	A	B	R	S Ø x l	Tor-que	max. rpm(min⁻¹)
00731	30	1:1	1	42	37	2x2	5x15	2 Nm	250
00741	40	1:1	2	58	50	3x3	10x27	5 Nm	560
00742	40	1:1,5	1,5	58	50	3x3	10x27	5 Nm	560
									840
00761	60	1:1	2,5	82	70	5x5	14x35	15 Nm	750
00762	60	1:1,5	2	82	70	5x5	14x35	15 Nm	560
									840
00781	80	1:1	3	102	90	6x6	18x45	25 Nm	750
00782	80	1:1,5	3	102	90	6x6	18x45	25 Nm	560
									840
00711	100	1:1	4	130	110	6x6	22x45	30 Nm	750
00712	100	1:1,5	3	130	110	6x6	22x45	30 Nm	560
									840

Bevel gear box E / D / Q - series

For driving two parallel spindle units, one side with hollow shaft for the spindle unit, one side with journal for splined shaft, two sides with journal for splined shaft and motor, max. 3000 rpm.

V065 = for Size E 40, 60; D 120, 160; Q 60, 80
V090 = for Size E 60, 80(S); D 160, 200; Q 80, 100
V120 = for Size E 80(S), 100, 125; D 160, 200; Q 80, 100

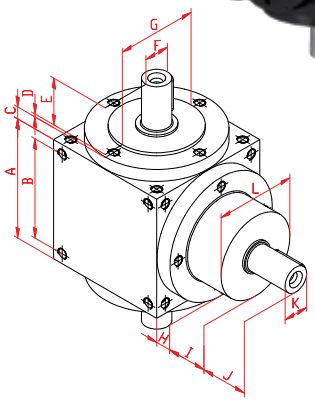

Code-No.	Type	A	B	C	D	E	F	G	H	I	J	K	L	i
00750	V065 - 1 Shaft	65	45	9,5	2	28	12_{j6}	44_{f7}	9,5	30	28	12_{j6}	44_{f7}	1:1 / 1:2
00751	V065 - 2 Shafts													
00752	V090 - 1 Shaft	90	70	10	2	38	18_{j6}	60_{f7}	10	30	37	18_{j6}	60_{f7}	1:1 / 1:2
00753	V090 - 2 Shafts													
00754	V120 - 1 Shaft	120	100	12	3	47	25_{j6}	80_{f7}	15	40	47	25_{j6}	80_{f7}	1:1 / 1:2
00755	V120 - 2 Shafts													

00751	Sample order code: Angular gear box size 60 with 2 journals

Transmission unit EL / EG

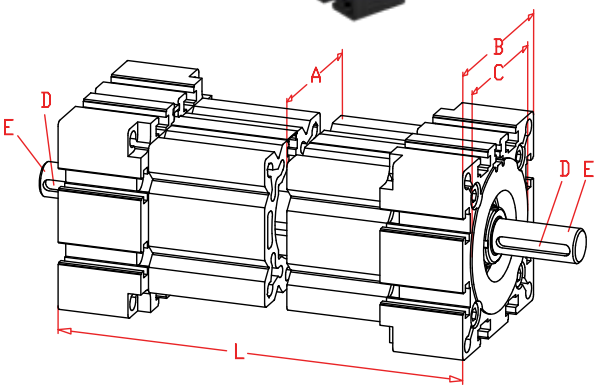

A shaft carried on ball bearings in an aluminium hollow section can be used to transmit torque or as a joining element for combining parallel linear units or as an individual element in angular operation.

Code-No.	Type	A	B	C	D	E	L_{min}	L_{max}
01931	30	30	42	40 x 0,7	2 x 2	5 x 15	38	3.000
01932	30 no shaft	30	42	40 x 0,7	-	-	38	3.000
01941	40	40	58	48 x 1	3 x 3	10 x 27	50	6.000
01942	40 no shaft	40	58	48 x 1	-	-	50	6.000
01961	60	60	82	62 x 1	5 x 5	14 x 35	70	6.000
01962	60 no shaft	60	82	62 x 1	-	-	70	6.000
01981	80	80	102	80 x 1	6 x 6	18 x 45	90	6.000
01982	80 no shaft	80	102	80 x 1	-	-	90	6.000
01911	100	100	130	110 x 1	6 x 6	22 x 45	110	6.000
01912	100 no shaft	100	130	110 x 1	-	-	110	6.000

01941	0750	Sample order code: Size 40, length L = 750 mm

Splined shaft EL / ML / EG - DL / DS

Parallel transfer

Steel splined shaft, for torque transfer between two parallel drives.
Shafts longer than 1200 mm are hollow shafts with welded journals.

Code-No.	Type	A	B	C	D	L_{max}
02230	EL/EG 30	15	12	2x2x12	6_{h7}	1.500
02240	EL/EG 40	27	20	3x3x25	10_{h7}	3.000
02260	EL/ML/EG 60 QL/QS 60 DL 120	35	24	5x5x28	14_{h7}	3.000
02280	EL/ML/EG 80 QL/QS 80 DL/DS160	45	30	6x6x40	18_{h7}	3.000
02210	EL/ML 100 QL/QS 100 DL/DS 200	55	40	6x6x50	22_{h7}	4.500
02220	EL 125	55	50	8x7x50	30_{h7}	5.000

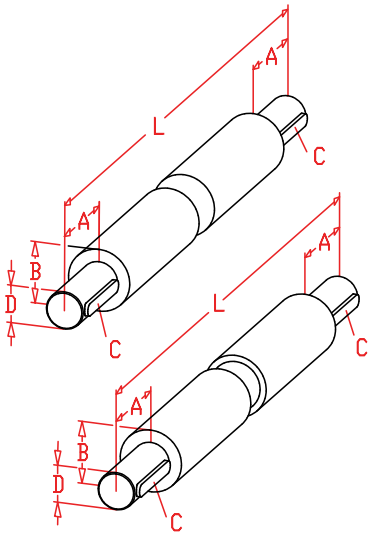

02240	0500

Sample order code:
Size 40, length L = 500 mm

Splined shafts based on an aluminium tube
Aluminum splined shaft parallel to the torque transmission with adjustment units arranged. The splined shaft consists of an aluminum hollow shaft with bonded journals of stainless steel.

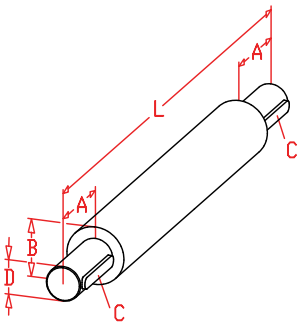

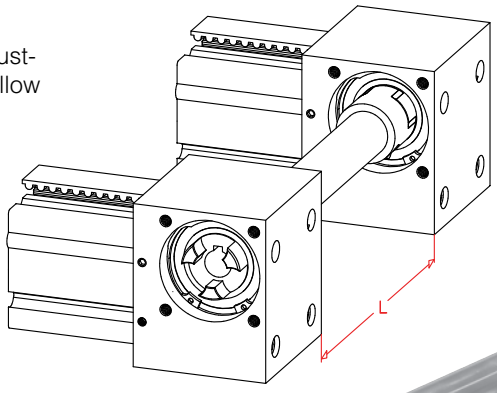

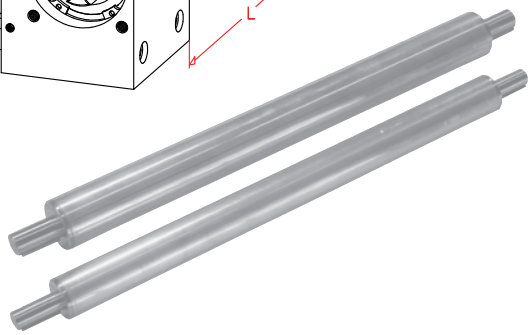

Code-No.	Type	A	B	C	D	L_{max}
02264	EL/ML/EG 60 QL/QS 60-80 DL 120	35	27	5x5x28	14_{h7}	3000
02284	EL/ML/EG 80 QL/QS 80 DL/DS 160	45	40	6x6x40	18_{h7}	3000
02214	EL/ML 100 QL/QS 100 DL/DS 200	45	50	6x6x50	22_{h7}	4500
02224	EL 125	55	60	8x7x50	30_{h7}	5000

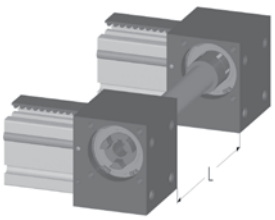

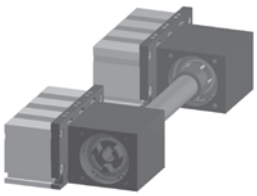

Sample ordering code:

Code-No.	L
02214	2000

Spindle shaft for EL/QL/QS 100 and DL/DS 200 with keyway, length 2000 mm

Accessories

Toothed pulley HTD

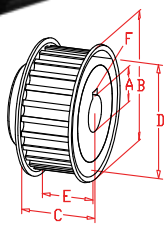

Material St 50, secured with key.

Belt
Pulley
Incremental encoder

Code-No.	Type	A	B	C	D	E	F	Number of teeth	Spa-cing
00450	EL/EG 30	6	23	26	18,3	15	2x2	20	3x15
00451	EL/EG 40	10	36	26	30,7	15	3x3	20	5x15
00452	EL/EG 60 DL/DS120	14	44	38	40,2	25	5x5	26	5x25
00453	EL/EG 80 DL/DS160	18	54	38	49,8	25	6x6	32	5x25
00454	EL100	22	66	48	61,1	38	6x6	24	8x30

Toothed belt endless HTD

Code-No.	Type	Belt	Tensile force
00550	EL/EG 30	3M15	200 N
00551	EL/EG 40	5M15	390 N
00556	EL/EG 40	5M09	298 N
00552	EL/EG60	5M25	894 N
00553	EL/EG80	5M25	894 N
00554	EL100	8M30	1070 N
00555	EL100	8M20	980 N

00551	0700

Sample order code:
Belt 5M15 perimeter: 700 mm

Parallel transfer unit for spindle drives

DL / DS

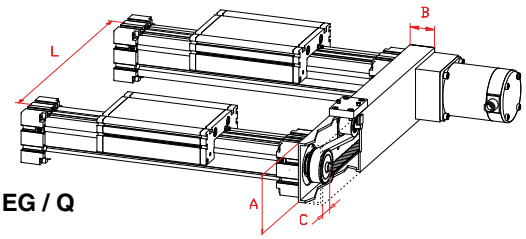

EL / EG / Q

Black anodized aluminium tube with plastic end caps, pulleys fixed with keys or tension rings. Spindle centers are multiples of 5 or 8 mm, according to belt pitch.

Code-No.	Type	A	B	C	L_{max}	Belt
T13030	EL/EG 30	50	25	25	1.200	5M-9
T13040	EL/EG 40	80	40	30	1.500	5M-15
T13060	EL/EG/Q 60	100	50	42	2.000	5M-25
T13061	DL/DS 120	60	40		2.000	5M-25
T13080	EL/EG/Q 80	120	50	52	2.000	5M25
T13081	DL/DS 160	80	50		2.000	5M-25
T13010	EL/Q 100	160	80	66	3.000	8M-30
T13020	EL 125					
T13011	DL/DS 200					

T13060	500

Sample ordering code: Center-distance of axis L = 500 mm

For center-distances higher than 800mm
you have to use an additional tensioning device code-number 04099.

Incremental encoder

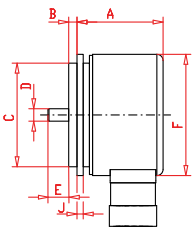

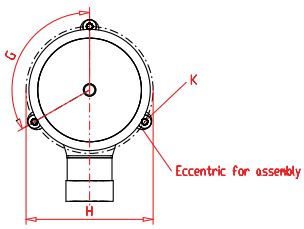

With flange and coupling, ready for assembly to any linear unit.
500 increments per revolution. Other resolutions on request.

Code-No.	A	B	C	D	E	F	G	H	J	K for
E 05500	57,5	4	50_{h7}	6_{h9}	10	58,5	120°	65	3	M3

nookindustries.com toll-free 1 (800) 321-7800
www.nookindustries.ru (499) 703 35 98 sell@nookindustries.ru

Toothed Belt Gear

Toothed Belt Gear

Rectangular aluminium tubular housing, ends covered with plastic end caps. Toothed pulley fitted to motor shaft with key or tension ring. Housing can be used for adapting nearly any motor.

Dimensions in the table are examples. In general dimensions depend on motor-shaft, flange and ratio.

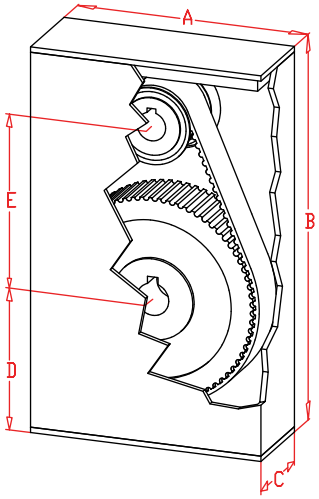

Code-No.				Type	A	B	C	D	E	Belt	Ratio **	Driving torque
T1-		30-		30	60	117	30	22	60*	3M15	1:1 2:1 2,4:1 3:1 others on request	max. 2 Nm
T1-		40-		40	100	190	40	55	87*	5M-15		max. 4 Nm
T1-		60-		60	100	190	50	55	87*	5M25		max. 8 Nm
T1-		80-		80	120	220	54	54	107*	5M25		max. 12 Nm
T1-		10-		100	180	340	60	80	163*	8M30		max. 20 Nm
T1-		12-		125								

***depends on motor size**
****depends on motor shaft diameter**

Motor mounting with belt reducing gear for belt driven units

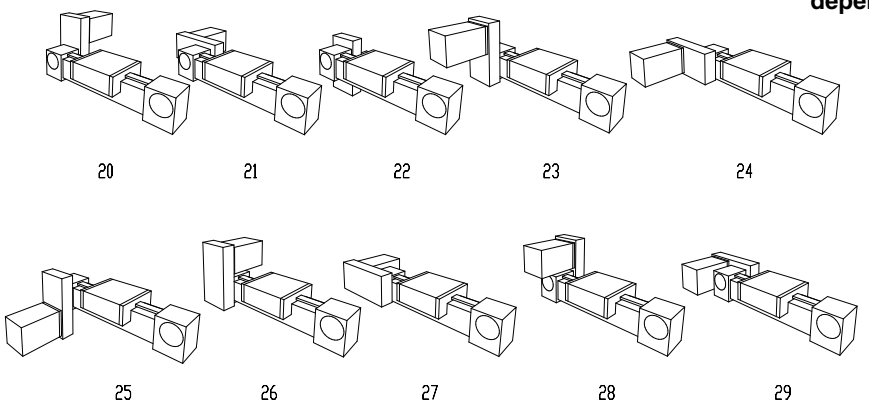

Motor mounting with belt reducing gear for spindle drives

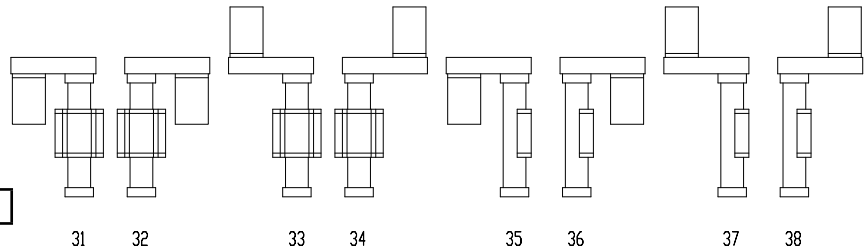

Motor mounting

Ratio

T1-	22	40-	2,4

Sample order code:
Size 40, for belt drive units, motor mounting 22, ratio 2,4:1.

Inline and Right Angle Gear Box

Inline Gear Reducer

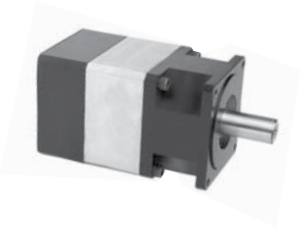

Type	Single Stage In-line Ratios	Double Stage In-line Ratios	Triple Stage In-line Ratios
Nema 17	3:1/4:1/5:1/5.5:1/7:1/10:1	15:1/16:1/20:1/22:1/25:1/28:1/30:1 /40:1/49:1/50:1/55:1/70:1/100:1	160:1/280:1/400:1/550:1/700:1
Nema 23			
Nema 34			
Nema 42			
Nema 56			
Nema 75			
Metric 40			
Metric 60			
Metric 75			
Metric 100			
Metric 140			
Metric 180			

Right Angle Gear Reducer

Type	Single Stage Right Angle Ratios	Double Stage Right Angle Ratios	Triple Stage Right Angle Ratios
Nema 17	3:1/4:1/5:1/5.5:1/7:1/10:1	15:1/16:1/20:1/22:1/25:1/28:1/30:1 /40:1/49:1/50:1/55:1/70:1/100:1	160:1/280:1/400:1/550:1/700:1
Nema 23			
Nema 34			
Nema 42			
Nema 56			
Nema 75			
Metric 40			
Metric 60			
Metric 75			
Metric 100			
Metric 140			
Metric 180			

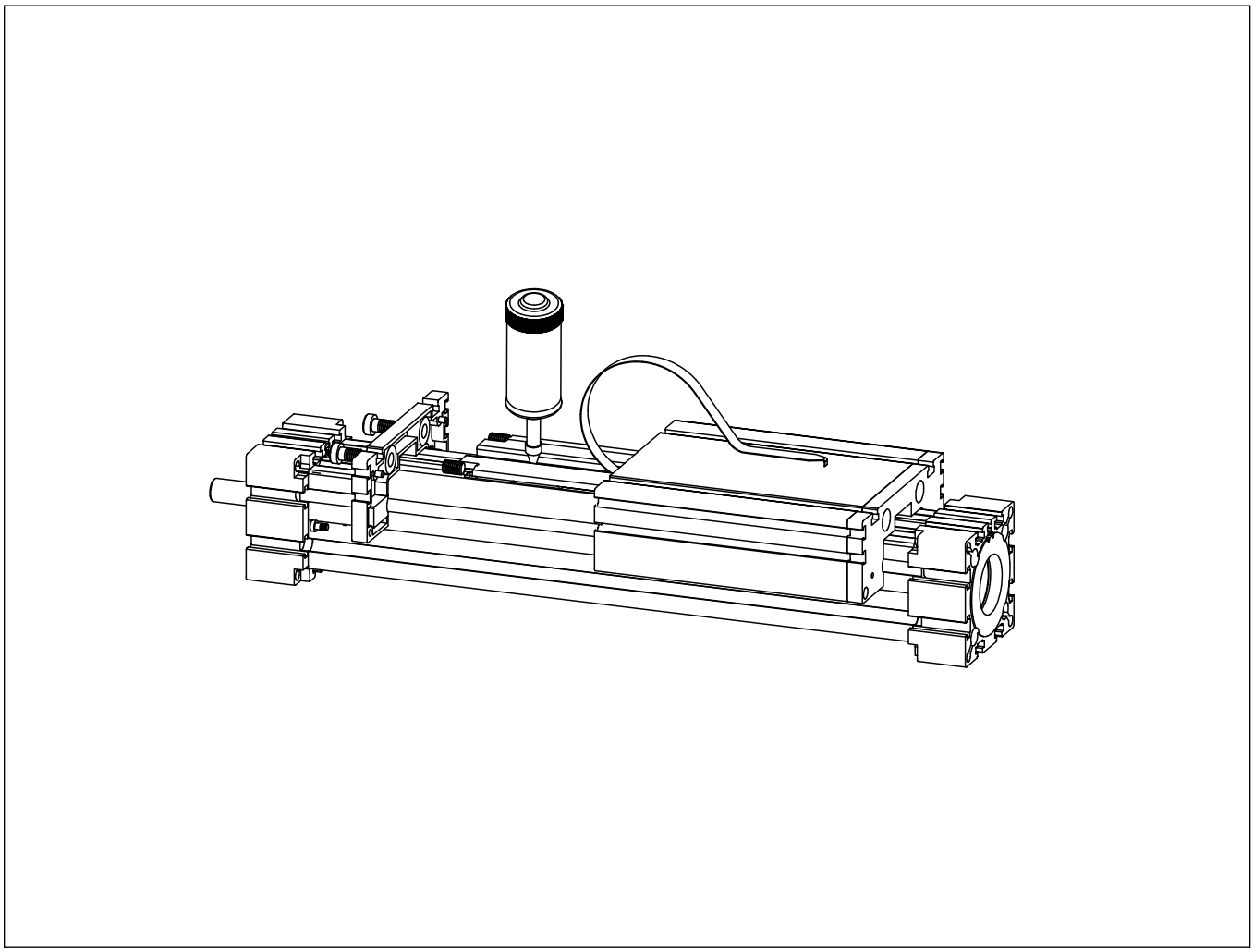

Belt & Screw Critical Speeds & Application Specifications

Specifications

Calculation of max. acceleration

$$a = \frac{F}{m}$$

Calculation of max. acceleration distance

$$s = \frac{v \times t}{2}$$

Calculation of max. acceleration time

$$t = \frac{v}{a}$$

F= belt tension (N)
a= acceleration (m/s^2)
m= mass (kg)
v= velocity (m/s)
s= distance (m)
t= time (s)

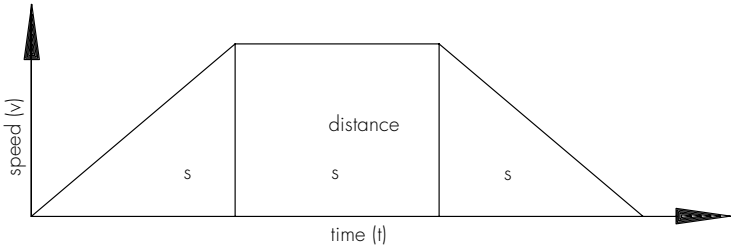

Type	t_a> 0,2 s		t_a< 0,2 s		Minimum length strength (N)	Belt size
	F_{max} (N)	safety factor 1,5 (N)	F_{max} (N)	safety factor 1,5 (N)		
ELZ 30	200	133	280	187		3 M 12
ELZZ 60	298	199	333	222	3690	5 M 09
ELZ, ELZT, ELSD, ELZU, ELZG 40, ELSZ 30/40	390	266	480	320	6478	5 M 15
ELZ, ELZT, ELSZ, ELSD, ELZU, ELZG 60, ELHZ, ELVZ 60 /80 DLZ 120 QLZ, QSZ 80 / QLSZ, QSSZ 80	894	596	1000	666	12013	5 M 25
ELZZ 80	679	452	746	498	3888	8 M 12
ELZZ 100	1210	801	1331	887	9700	8 M 20
ELZ, ELZT, ELSZ, ELSD, ELZU, ELZG 80, DLZ, DSZ 160 / DLZT, DSZT, DLSZ 120 QLZ, QSZ 80	1900	1266	2090	1393	15400	8 M 30
ELHZ, ELVZ, ELZW 100	3840	2559	4128	2751	25632	8 M 48
ELZ, ELZT, ELSZ, ELSD, ELZG 100, QLZ, QSZ 100 DLZ 200 / DLSZ, DSSZ 160	4000	2666	4300	2866	26700	8 M 50
ELZ 125	5900	3933	6350	4233	37380	8 M 70

Weights

Sizes	Guide-body profile	Internal profile	guide rod	Belt	per pulley	Toothed rack	Standard carriage	Carriage profile	Coupling
30	1,07 kg/m	-	0,15 kg/m	0,037 kg/m	0,06 kg	-	0,176 kg	1,78 kg/m	0,007 kg
40	1,89 kg/m	-	0,22 kg/m	0,074 kg/m	0,14 kg	0,70 kg/m	0,520 kg	3,49 kg/m	0,010 kg
60	3,83 kg/m	-	0,61 kg/m	0,123 Kg/m	0,39 kg	0,81 kg/m	1,565 kg	7,49 kg/m	0,040 kg
80	7,40 kg/m	-	0,88 kg/m	0,256 kg/m	1,04 kg	1,13 kg/m	2,644 kg	12,79 kg/m	0,085 kg
80S	7,40 kg/m	-	0,88 kg/m	0,256 kg/m	1,04 kg	1,13 kg/m	3,520 kg	13,95 kg/m	0,085 kg
100	11,3 kg/m	-	1,58 kg/m	0,355 Kg/m	0,48 kg	2,75 kg/m	6,550 kg	19,98 kg/m	0,200 kg
125	15,54 kg/m	-	2,47 kg/m	0,480 kg/m	1,62 kg	-	12,100 kg	28,05 kg/m	0,395 kg
DL 120	5,61 kg/m	1,52 kg/m	0,22 kg/m	0,123 Kg/m	0,39 kg	-	1,100 kg	4,15 kg/m	0,040 kg
DL 160	10,34 kg/m	3,73 kg/m	0,61 kg/m	0,256 kg/m	0,86 kg	-	3,280 kg	7,99 kg/m	0,085 kg
DL 200	19,55 kg/m	3,48 kg/m	0,61 kg/m	0,355 Kg/m	0,688 kg	-	4,950 kg	10,99 kg/m	0,200 kg
DS 160	10,52 kg/m	3,48 kg/m	1,40 kg/m	0,256 kg/m	0,86 kg	-	2,250 kg	7,99 kg/m	0,085 kg
QL 60	3,29 kg/m	-	0,22 kg/m	0,123 Kg/m	0,39 kg	-	0,456 kg	2,05 kg/m	0,040 kg
QL 80	7,05 kg/m	-	0,61 kg/m	0,256 kg/m	1,04 kg	-	1,229 kg	3,85 kg/m	0,085 kg
QL 100	10,45 kg/m	-	0,61 kg/m	0,355 Kg/m	0,688 kg	-	2,920 kg	5,49 kg/m	0,200 kg
QS 60	3,79 kg/m	-	1,40 kg/m	0,123 Kg/m	0,39 kg	-	0,860 Kg	2,05 kg/m	0,040 kg
QS 80	6,82 kg/m	-	2,40 kg/m	0,256 kg/m	1,04 kg	-	2,339 kg	3,85 kg/m	0,085 kg
QS 100	10,55 kg/m	-	3,20 kg/m	0,355 Kg/m	0,688 kg	-	4,320 kg	5,49 kg/m	0,200 kg

Calculation of torsional twist

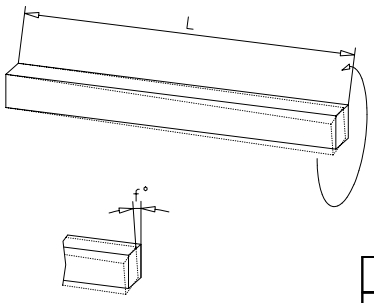

$$f° = L \times M_{t\,max.} \times I_p \qquad \left[\frac{° \times Nm \times m}{Nm \times m}\right]$$

f°= max. twisting angle (°)
L = unit length
$M_{t\,max}$= max. torque (Nm)
I_p= see table (°/Nm²)

Aluminium profiles
Stiffness F25 (250 N/mm²)
Thickness of anodizing coat 20 to 30 mm

Size	I_p Factor	Size	I_p Factor	Size	I_p Factor
EL 30	0,49000 °/Nm x m	DL 120	0,03282 °/Nm x m	QL 60	0,02995 °/Nm x m
EL 40	0,18000 °/Nm x m	DL 160	0,01286 °/Nm x m	QL 80	0,01257 °/Nm x m
EG 40	0,14000 °/Nm x m	DL 200	0,00787 °/Nm x m	QL 100	0,00705 °/Nm x m
EL 60	0,05765 °/Nm x m	DS 160	0,01336 °/Nm x m	QS 60	0,03797 °/Nm x m
EG 60	0,04387 °/Nm x m			QS 80	0,01563 °/Nm x m
EL 80	0,01463 °/Nm x m			QS 100	0,00644 °/Nm x m
EG 80	0,01511 °/Nm x m				
EL 100	0,00492 °/Nm x m				
EL 125	0,00616 °/Nm x m				

Diagram for maximum rpm of screw units

Ball Screw units

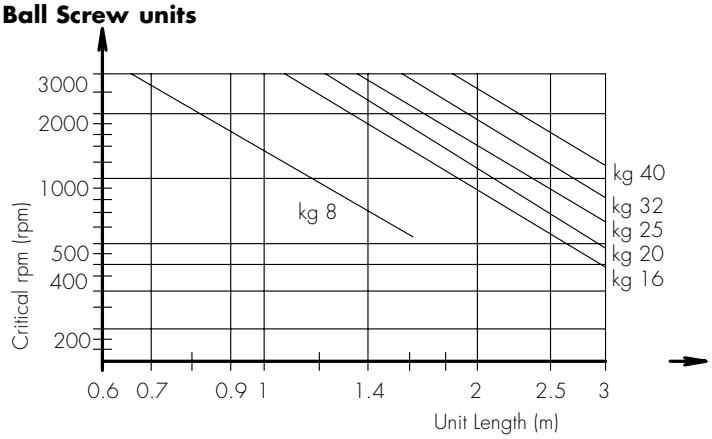

Acme Screw units

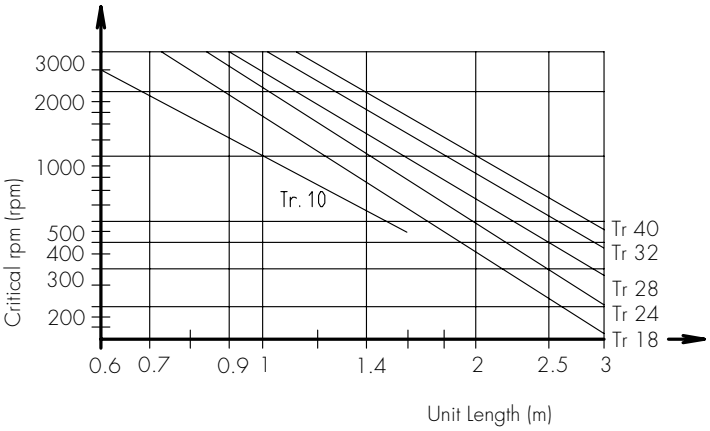

$n_{max.}$ = table value x 0,8

Applications in Use

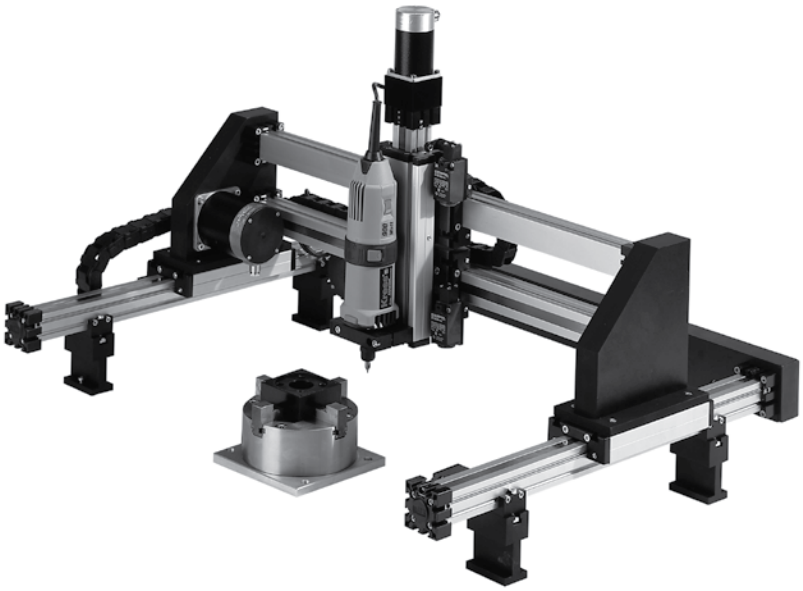

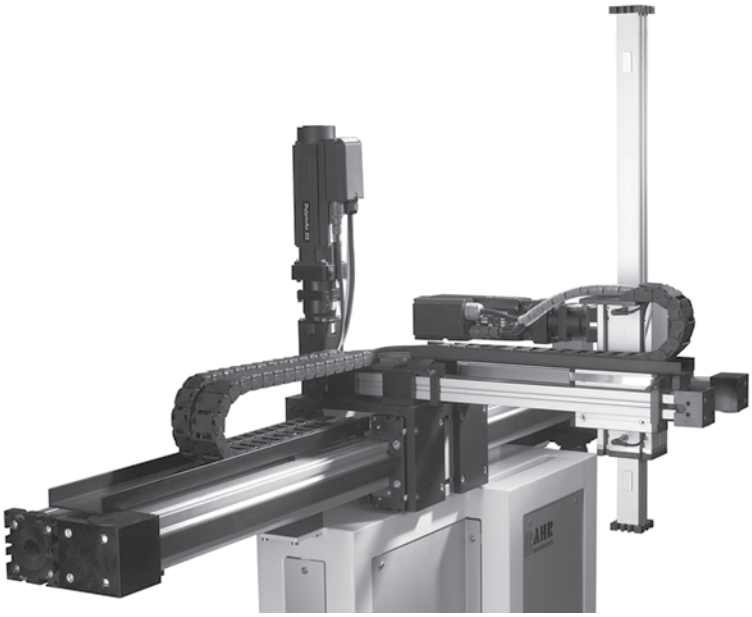

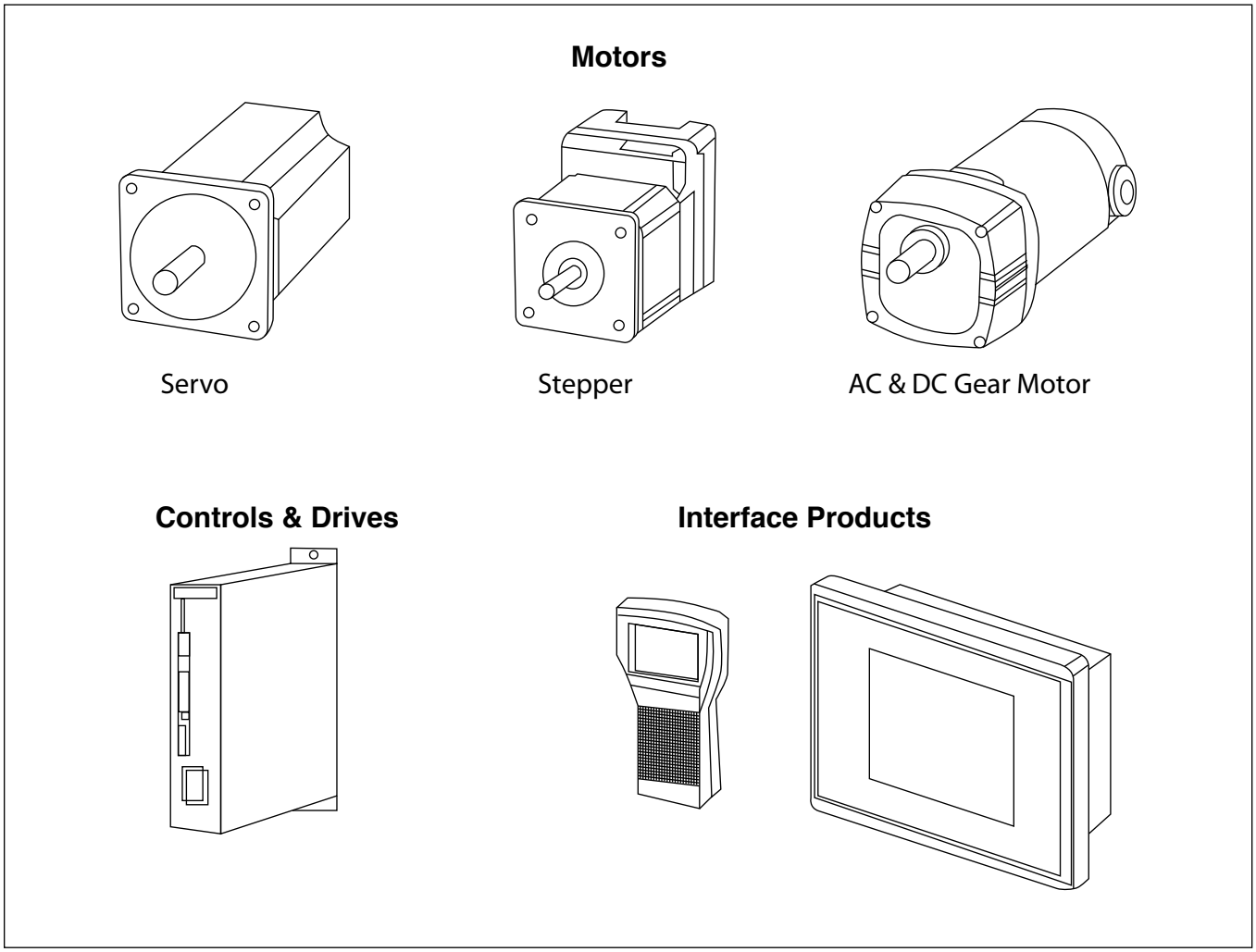

Motors and Control Units

DC, AC, Stepper and Servo Motors, Drives,
Controls and Keypad Human Machine Interfaces are available.

Nook Industries offers a broad range of products to meet application requirements.
Contact **CUSTOMER SERVICE at (216) 271-7800 or (800) 321-7800**
by email at **engineering@precisionactuator.com.**
or by **fax at (216) 271-7020** to discuss your requirements.
For inquires or quotations email **sales@nookindustries.com.**

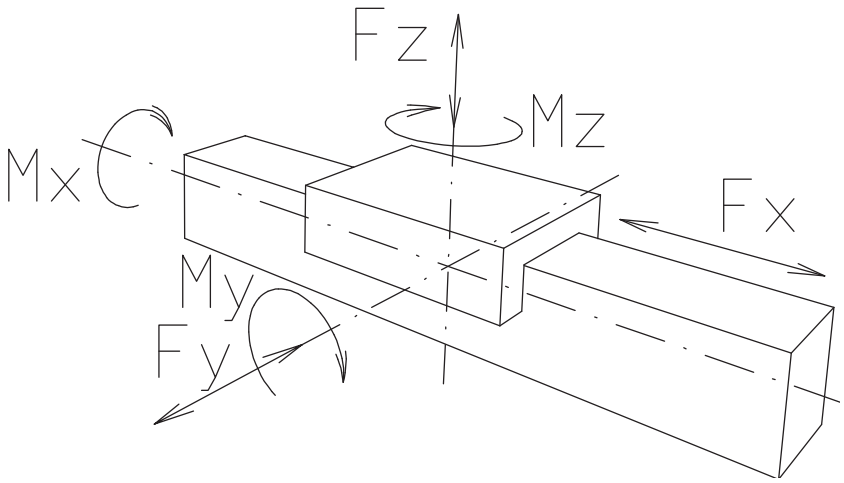

Ordering Templates

Request for Quotation

Fax: (216) 271-7120

Date:

Pages (Including this cover):

Customer:

Address: City:

State/Province: Country: Zip:

Contact Name:

Phone: Fax:

E-mail:

Template Title	Quantity

FAX CUSTOMER SERVICE at: (216) 271-7120 with a copy of your drawing or select a template from the following pages that best matches your application requirements.

1. Fill in all available data with tolerance in metric units.
2. If a specification is not on the template, add the applicable dimensions and tolerances desired.
3. If a specification is not required but is on the template, draw a line through it, and mark the item description with N/A.
4. Include additional notes to the template to aid in quoting and manufacturing.

For questions or help in selecting the best solution for your application requirements, please complete the application data sheet on page 153 and fax it to (216) 378-9923 or email to engineering@precisionactuator.com
APPLICATION ENGINEERING at: (800) 321-7900 or **email: engineering@nookindustries.com**

These templates are available in pdf format online
www.precisionactuator.com
Nook Industries, Inc.–Precision Actuator Group • 4950 E. 49th Street Cleveland, OH 44125

Application Data Form For Modular Actuators

Fig.1 **Horizontal Axis**

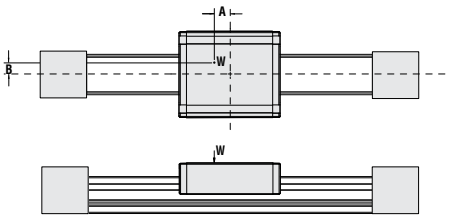

Fig. 2 **Vertical Axis**

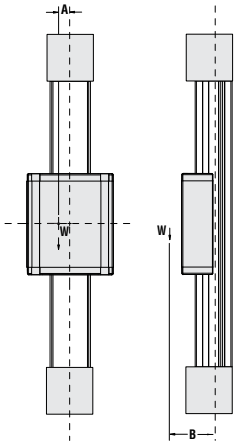

Fig.3 **Perpendicular Axis**

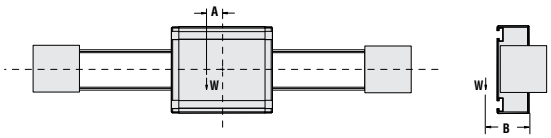

LENGTH

Length: _____ mm

Orientation: ❒ Fig. 1 Horizontal Axis ❒ Fig. 2 Vertical Axis ❒ Fig. 3 Perpendicular Axis

System Axis: (see pages 141-144, ie: 1a, 1b)_____

LOAD

Total Maximum Dynamic Load:_____kN A: _____ C:_____ W: _____

Total Maximum Static Load: _____kN B: _____ D:_____

TRAVEL RATE

Average Speed: _____ m/minute Minimum Speed: _____ m/minute

Maximum Acceptable Speed: _____ mm/minute

DESIRED LIFE

Distance per cycle:_____ mm (usually twice the travel)

Number of cycles: _____/ day _____/ year Desired Life: _____ years

APPLICATION EXPLANATION

Please briefly describe the application with as many details as possible. Include drawing, sketch or order template if available.

_____

_____

Please select a configuration 1a through 1i below that best illustrates your application. Please include on the application data form see page 195.

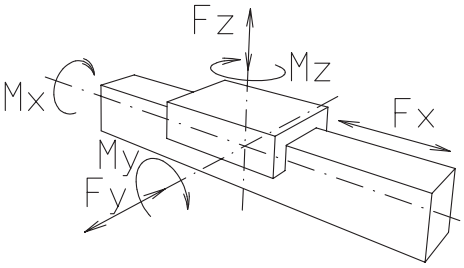

1a

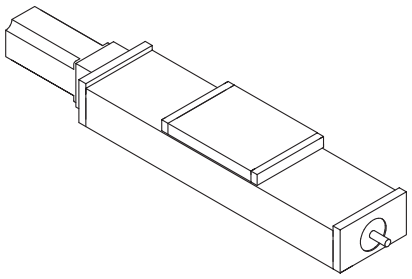

1b

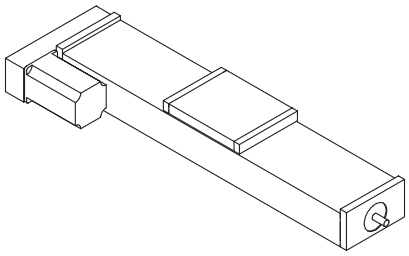

1c

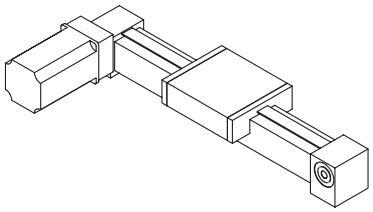

1d

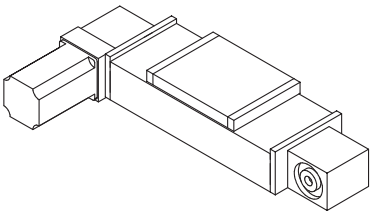

1e

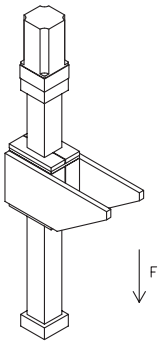

1f

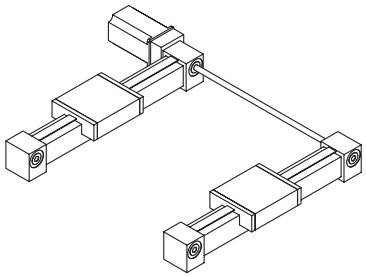

1g

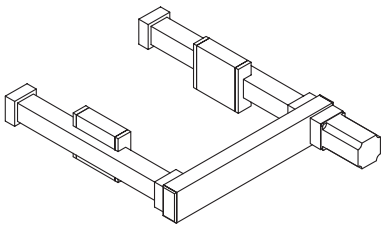

1h

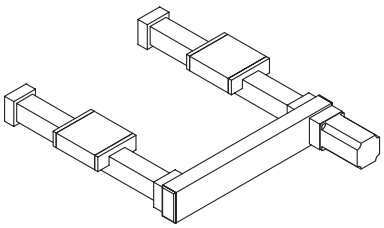

1i

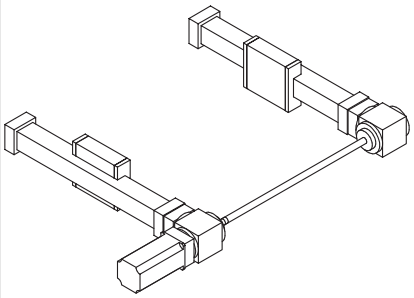

Please select a configuration 2a through 2i below that best illustrates your application. Please include on the application data form see page 195.

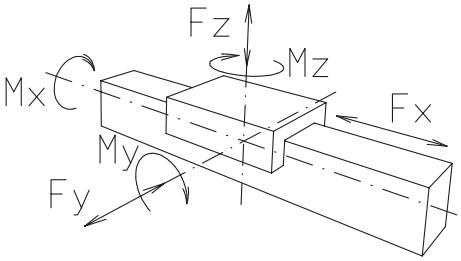

2a

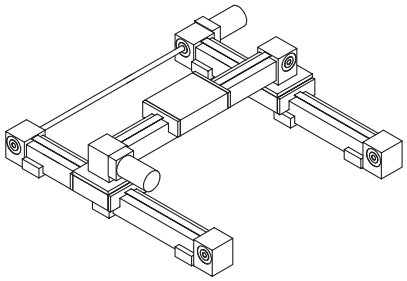

2b

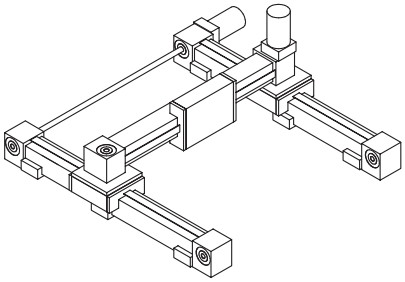

2c

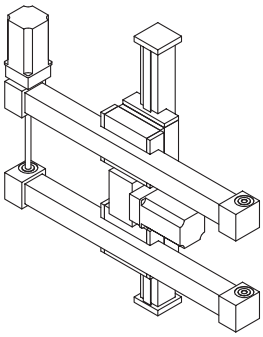

2d

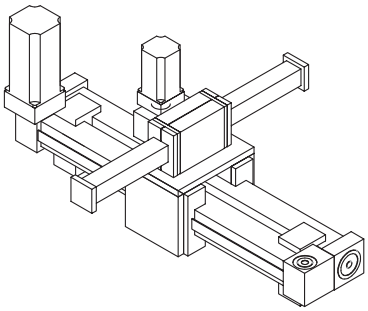

2e

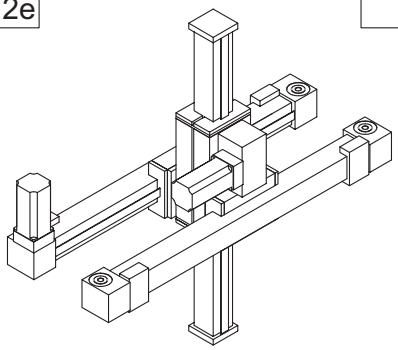

2f

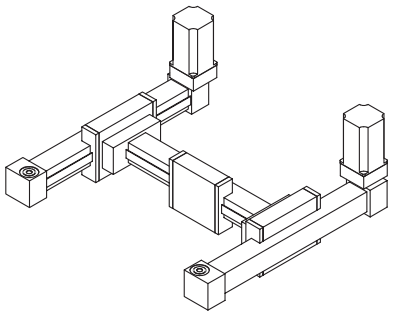

2g

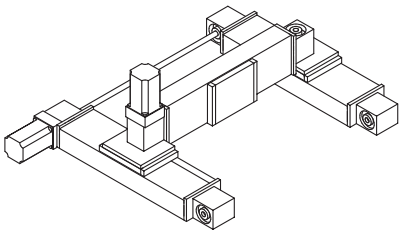

2h

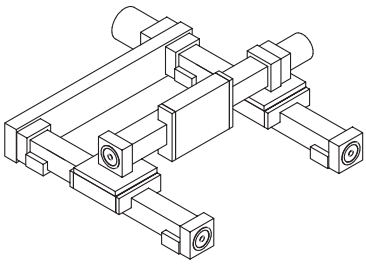

2i

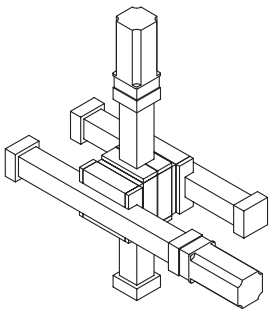

Please select a configuration 3a through 3i below that best illustrates your application. Please include on the application data form see page 195.

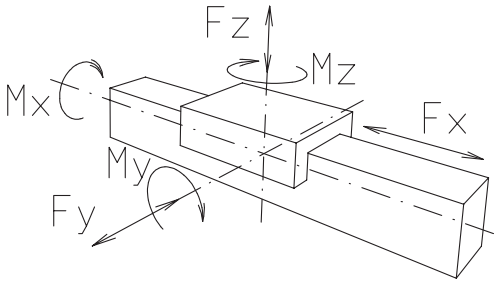

3a

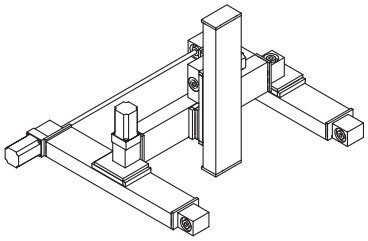

3b

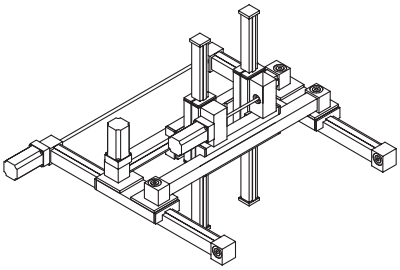

3c

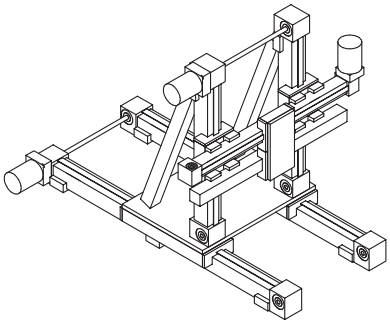

3d 3a

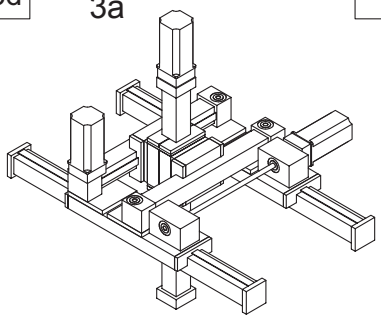

3e 3b

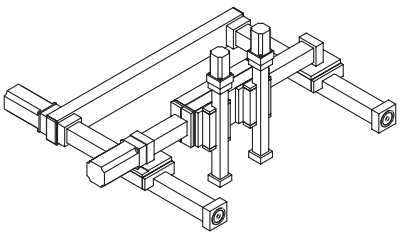

3f 3c

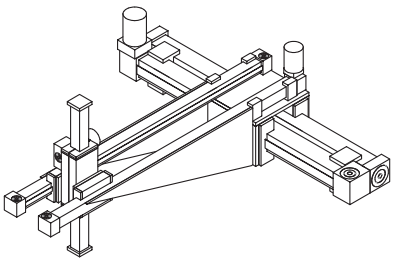

3g

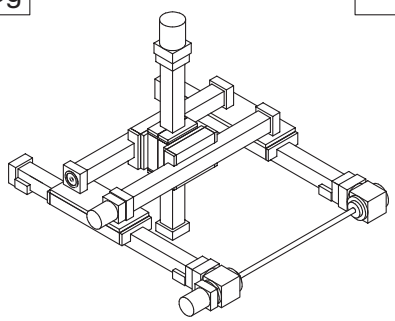

3h

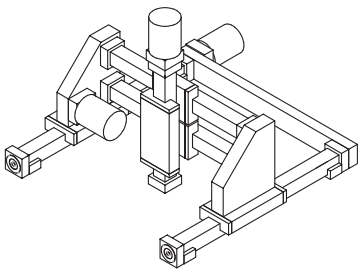

3i

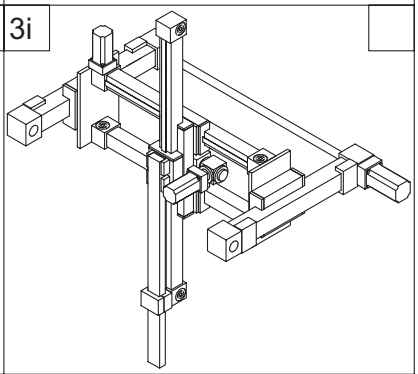

UNIT CONVERSION

ENGLISH TO METRIC

Length
1 ft = 304.8 mm
1 ft = .3048 m
1 ft = .0003048 km
1 in = 25400 μm
1 in = 25.4 mm
1 in = .0254 m
1 in = .0000254 km

Weight/Force
1 lb = .454 kg
1 lb = .454 kgf
1 lb = 4.45 N
1 lb = .00445 kN

Speed
1 ft/sec = .3048 m/sec
1 in/sec = .0254 m/sec

Torque
1 lb-ft = .001356 kN-m
1 lb-ft = 1.356 N-m
1 lb-ft = 135.6 N-cm
1 lb-ft = 1356 N-mm
1 lb-ft = .1383 kgf-m
1 lb-in = .000113 k-m
1 lb-in = .113 N-m
1 lb-in = .01152 kgf-m

Weight
1 lb/in = 17.9 kg/m
1 lb/ft = 1.49 kg/m

METRIC TO ENGLISH

Length
1 mm = .00328 ft
1 m = 3.28 ft
1 km = 3821 ft
1 μm = .0000394 in
1 mm = .03937 in
1 m = 39.37 in
1 km = 39370 in

Weight/Force
1 kg = 2.205 lb
1 kgf = 2.205 lb
1 N = .225 lb
1 kN = 224.8 lb

Speed
1 m/sec = 3.28 ft/sec
1 m/sec = 39.37 in/sec

Torque
1 kN-m = 737.3 lb-ft
1 N-m = .737 lb-ft
1 N-cm = .00737 lb-ft
1 N-mm = .000737 lb-ft
1 kgf-m = 7.23 lb-ft
1 kN-m = 8847.2 lb-in
1N-m = 8.847 lb-in
1 kgf-m = 86.8 lb-in

Weight
1 kg/m = .056 lb-in
1 kg/m = .672 lb-ft

Index

Title	Chapter/Page
EG/EL Modular Linear Actuator Belt or Screw Driven	**1.1**
EGT – EGK	12-13
EGT – EGK Right-/Left Handed Thread	14
EGZ	16-17
EHT – EHK	18-19
ELT – ELK	20-12
EL Modular Linear Actuator without Drive	**2.1**
ELR	24-25
ELRZ	26
ER	27
E	28-29
UL	30-31
ELZ Modular Linear Actuator External Belt Driven Actuator with Roller Bearing Guidance	**3.1**
ELZ	34-35
ELZex	36-37
ELZ Carriage Right—Left Moving	38
ELZG	39
ELZZ	40-41
ELSZ with Standard Belt Performance	42-43
ELSZ with Belt Widening	44-45
ELSD with Standard Belt Performance	46-47
ELSD with Belt Widening	48-49
ELZT	50-51
Functioning Drawing for ELZT Units	52-53
ELHZ	54-55
ELVZ	56-57
ELVZ Carriage Right—Left Moving	58
ELFZ	60-63
ELZU	64-65
MLZ	66-67
QL Modular Linear Actuator—Rack & Pinon Driven	**4.1**
ELZA	70
ELZQ	72-73
QL Modular Linear Actuator—Belt Driven	**5.1**
QLZ	76-77
QLR	78-79
QS Modular Linear Actuator Belt or Screw Driven Actuator with Profile Rail Guidance	**6.1**
QSZ	82-83
QSSZ	84-85
QST	86-88
QSR	90-91
QSSR	92-93
DL Modular Linear Actuator Belt or Screw Driven Actuator with Profile Rail Guidance	**7.1**
DLT – DLK	96-97
DLT – DLK Carriage Right—Left Moving	98
DLZ	100-101
DLZA	102-103
DLSZ	104-105
DLVZ	108-109
DLR	110-111

Title	Chapter/Page
DS Modular Linear Actuator Belt or Screw Driven Actuator with Profile Rail Guidance	**8.1**
DST – DSK	114-115
DST – DSK carriage right - left moving	116
DSZ	118-119
DSSZ	120-121
DSR	122-123
DLM/DLVM Linear Motor Carriage with Roller Bearing Guidance **DS** Linear Motor Carriage with Profile Rail Guidance	**9.1**
DLM	126-127
DLVM	128-129
DSM	130-131
Mounting styles	132
ALLM/ALLZ/ALLR Linear Motor Driven Carriage with Roller Bearing Guidance	**10.1**
ALLM	134-135
ALLZ	136-137
ALLR	138-139
QLZE/QSZE/QST/KE Stainless Steel	**11.1**
QLZE	142-143
QSZE	144-145
QST/KE	146-147
ELBZ R800	148-149
Spare Parts	**1.2**
Carriage	154-156
Eccentric	157
Body Profile	158
Spindle	159
Ballscrew	160
Lubricants	161
Toothed	162
Pulley	163-165
Belt Adjuster	166
Accessories	**2.2**
Square Nuts, T-nuts, Rhombus Nut, Half Round Nut	168
Mounting Possibility	169
Handwheel Positional Indicator Clamp	170
Clamp Mounting Systems	171
Support and Mounting Blocks	172-173
Limit Switch, Proximity Switch	175-177
Activating Strip, Cable Conduit, Cable Chain	178
Coupling, Tension Sets	179
Motor Adapter, Bellows	181
Bevel Gear, Combination Cube, Angular Gear	181
Transmission Unit, Splined Shaft	182
Inline and Right Angle Gear Box	182
Toothed Pulley, Toothed Belt, Parallel Transfer Unit	184
Incremental Encoder	184
Toothed Belt Gearing	185
Belt and Screw Critical Speeds and Application Specifications	**3.2**
Specifications	188-189
Motors and Control Units	**4.2**
DC, AC, Stepper and Servo Drives	192
Ordering Templates	**5.2**
Request for Quotation	194
Application Data Form	195
Single Axis System	196
Two Axis System	197
Three Axis System	198
Unit Conversion	199

NOOK™

Precision Actuatorgroup
a division of Nook Industries

2D/3D CAD files online

FASTER DEVELOPMENT

The first fully configurable and downloadable native CAD formats for 2D drawings and 3D models online for ball screws, acme screws, screw jacks, electric cylinders, linear components and slide systems. Configure, view and download assemblies directly to your CAD program to determine how it fits into your overall designs.

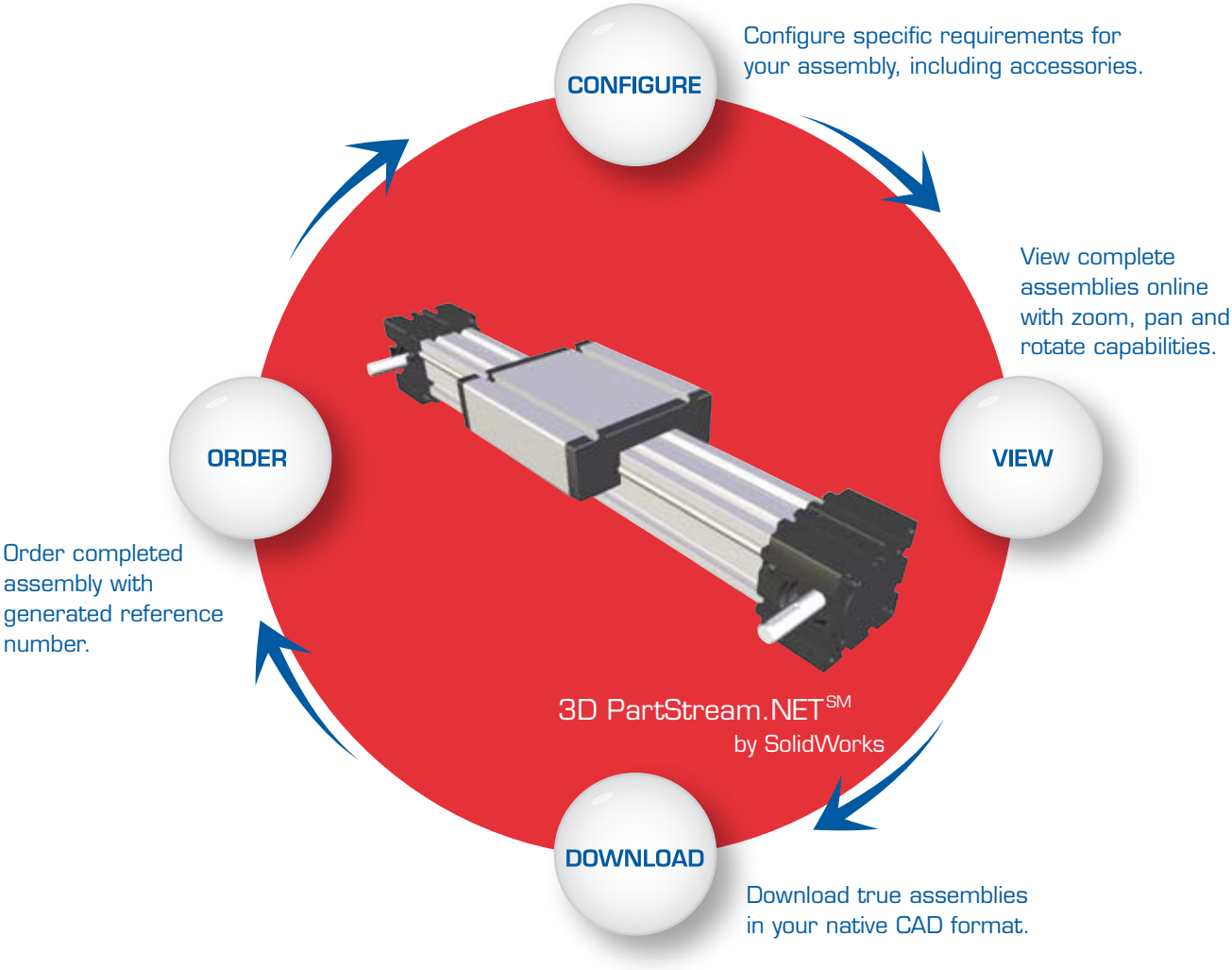

www.nookindustries.com

Our products make us industry leaders.
Our people make us world class.

NOOK™

4950 East 49th Street | Cleveland, OH 44125-1016 USA | 216.271.7900 | toll-free: 800.321.7800 | f: 216.271.7020 | email: nook@nookind.com